5MP HD IR VF Dome Network Camera

IPC3345SB-ADZK-PI



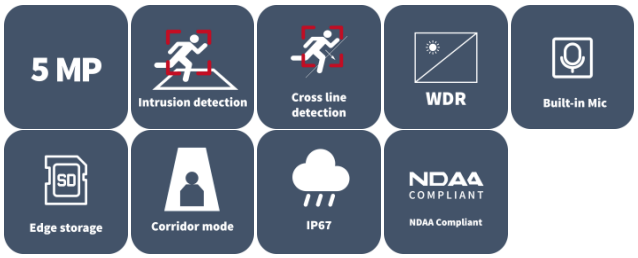

Features

- High quality image with 5 MP, 1/2.7" CMOS sensor
- 5 MP (2880 × 1620)@25/20 fps; 4 MP (2560 × 1440)@25/20 fps; 3 MP (2304 × 1296)@30/25 fps; 1080P (1920 × 1080)@30/25 fps
- Ultra 265, H.265, H.264, MJPEG
- 120 dB true WDR technology enables clear image in strong light scene
- Supports 9:16 corridor mode
- Built-in mic
- Smart IR, up to 40 m (131.2 ft.) IR distance
- MicroSD, up to 512 GB
- IK10 vandal resistant
- IP67 protection
- Supports PoE power supply
- 3-axis

Specifications

Model	IPC3345SB-ADZK-PI
Camera	
Max Resolution	5 MP
Sensor	1/2.7" CMOS
Min. Illumination	Color: 0.003 Lux (F1.6, AGC ON), 0 Lux with IR on
Day/Night	IR-cut filter with auto switch (ICR)
Shutter	Auto/Manual, 1 ~ 1/100000s
Adjustment Angle	Pan: 3° to 360°, Tilt: 0° to 70°, Rotate: 3° to 360°
S/N	>56 dB
WDR	120 dB
Lens	
Focal Length	2.8 to 12 mm
Iris Type	Fixed
Iris	F1.6
Field of View (H)	108.79° to 33.23°
Field of View (V)	56.90° to 18.33°
Field of View (D)	112.56° to 37.46°
DORI	
DORI Distance (Lens)	2.8 to 12 mm
DORI Distance (Detect)	63.0 m to 270.0 m (206.7 ft. to 885.8 ft.)
DORI Distance (Observe)	25.2 m to 108.0 m (82.7 ft. to 354.3 ft.)
DORI Distance (Recognize)	12.6 m to 54.0 m (41.3 ft. to 177.2 ft.)
DORI Distance (Identify)	6.3 m to 27.0 m (20.7 ft. to 88.6 ft.)
Illuminator	
Illumination Distance (IR)	40 m (131.2 ft.)
Wavelength	850 nm
IR On/Off Control	Auto/Manual
Video	
Video Compression	Ultra 265, H.265, H.264, MJPEG
H.264 Code Profile	Baseline profile, Main profile, High profile
Frame Rate	Main Stream: 5 MP (2880 × 1620), max. 25 fps; 4 MP (2560 × 1440), max. 25 fps; 3 MP (2304 × 1296), max. 30 fps; 1080P (1920 × 1080), max. 30 fps; Sub Stream: 720P (1280 × 720), max. 30 fps; D1 (720 × 576), max. 30 fps; 640 × 360, max. 30 fps; Third Stream: 640 × 360, max. 30 fps; CIF (352 × 288), max. 30 fps;
Video Bit Rate	128 Kbps to 16 Mbps
U-code	Support
OSD	Up to 4 OSDs
Privacy Mask	Up to 4 areas
ROI	Up to 8 areas
Video Stream	Triple streams

Image	
White Balance	Auto, Outdoor, Fine tune, Sodium lamp, Locked, Auto2
Digital Noise Reduction	2D/3D DNR
Smart IR	Support
Flip	Normal, Flip vertical, Flip horizontal, 180°, 90° Clockwise, 90° Anti-clockwise
Dewarping	N/A
HLC	Support
BLC	Support
Defog	Digital defog
Events	
Basic Detection	Cross line, Intrusion (based on human body detection), Motion detection, Ultra motion detection, Tampering alarm, Audio detection
General Function	Watermark, IP address filtering, Access policy, ARP protection, RTSP authentication, User authentication, HTTP authentication
Audio	
Audio Compression	G.711U, G.711A
Audio Bitrate	64 Kbps
Two-way Audio	N/A
Suppression	Support
Sampling Rate	8 kHz
Storage	
Edge Storage	MicroSD, up to 512 GB
Network Storage	ANR, NAS (NFS)
Network	
Protocols	IPv4, IPv6, IGMP, ICMP, ARP, TCP, UDP, DHCP, RTP, RTSP, RTCP, RTMP, DNS, DDNS, NTP, FTP, UPnP, HTTP, HTTPS, SMTP, SSL/TLS, QoS, 802.1x, SNMP, PPPoE
Compatible Integration	ONVIF (Profile S, Profile G, Profile T), API, SDK
User/Host	Up to 32 users. 3 user levels: administrator, common user and operator
Security	Password Protection, Strong Password, HTTPS Encryption, Export Operation Logs, Basic and Digest Authentication for RTSP, Digest Authentication for HTTP, TLS 1.2, WSSE and Digest Authentication for ONVIF
Client	EZStation, EZView, EZLive
Web Browser	Plug-in required live view: IE 10+, Chrome 45+, Firefox 52+, Edge 79+, Plug-in free live view: Chrome 57+, Firefox 58+, Edge 16+
Interface	
Audio I/O	N/A
Alarm I/O	N/A
Serial Port	N/A
Built-in Mic	Support
Built-in Speaker	N/A
WIFI	N/A
Network	1 × RJ45 10 M/100 M Base-TX Ethernet
Video Output	N/A

Certification	
EMC	CE-EMC (EN 55032, EN 61000-3-3, EN IEC 61000-3-2, EN 55035) FCC (FCC 47 CFR part15 B)
Safety	CE LVD (EN 62368-1) CB (IEC 62368-1) UL/CUL (UL 62368-1, CAN/CSA C22.2 No. 62368-1)
Environment	CE-RoHS (2011/65/EU;(EU)2015/863); WEEE (2012/19/EU);
Protection	IP67 (IEC 60529) IK10 (IEC 62262)
General	
Power	DC 12 V±25%, PoE (IEEE 802.3af) Power consumption: Max. 7.5 W
Power Interface	Ø5.5 mm coaxial power plug
Dimensions	Ø128 mm × 100 mm (Ø5.0" × 3.9") (Ø × H)
Weight	0.65 kg (1.43 lb.)
Material	Metal + Plastic
Working Environment	-30 ℃ to 60 ℃ (-22 ℉ to 140 ℉), Humidity: ≤ 95% RH (non-condensing)
Storage Environment	-30 ℃ to 60 ℃ (-22 ℉ to 140 ℉), Humidity: ≤ 95% RH (non-condensing)
Surge Protection	6 KV
Reset Button	Support
Web Client Language	13 Languages: English, Simplified Chinese, Polish, German, Russian, French, Korean, Dutch, Czech, Portuguese, Spanish, Spanish (Europe), Italian

Dimensions

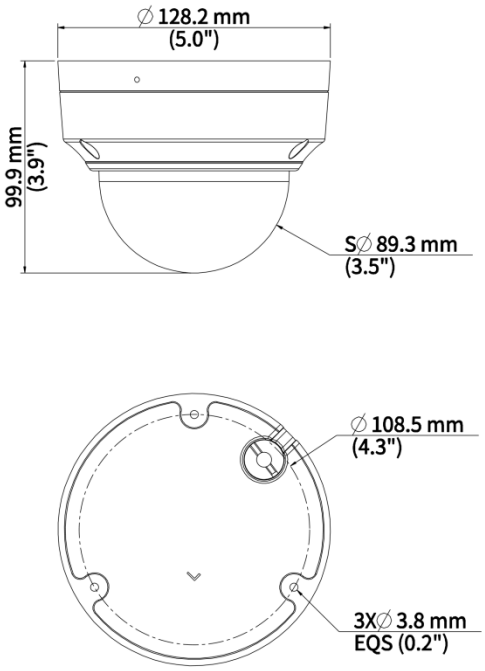

Accessories

TR-JB03-H-IN	TR-JB07/WM03-F-IN	TR-WM03-B-IN
Turret Junction Box(Support Wiring From Behind)	Wall Mounting Assembling Bracket with Back Hole For 3 Inches Dome	Wall Mounting Assembling Bracket For 3 Inches Hemisphere
		
TR-A01-IN	**TR-UP06-IN**	**TR-UC08-C**
NPT 3/4'' Waterproof Cable Gland	Universal Pole Mounting Bracket	Bullet&Dome Corner Mounting Bracket
		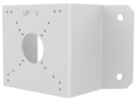

TR-SE24-IN	TR-SE24-A-IN	TR-CM24-IN
Dome Pendent Mounting Pole 200mm	Dome Pendent Mounting Pole 500mm	Dome Pendent Mounting Bracket(Indoor)
		

Unlimited New View

Zhejiang Uniview Technologies Co., Ltd.

http://www.uniview.com

overseasbusiness@uniview.com; globalsupport@uniview.com

No. 369, Xietong Road, Xixing Sub-district, Binjiang District, Hangzhou City, 310051, Zhejiang Province, China

©2023-2026 Zhejiang Uniview Technologies Co., Ltd. All rights reserved.

*Product specifications and availability are subject to change without notice.

Despite our best efforts, technical or typographical errors may exist in this document. Uniview cannot be held responsible for any such errors and reserves the right to change the contents of this document without prior notice.