4MP LPR Bullet Camera (warm light))

IPC2641-Z28-P-K





Features

- 1/1.8" progressive scan CMOS.
- Up to 2688 × 1520 resolution with real-time video.
- Supports AI ISP for enhanced image quality.
- Automatic gain control, white balance, and WDR for various light conditions.
- Video frame rate upgraded to 60 fps.
- Built-in vehicle and license plate recognition algorithm can recognize standard license plates of multiple countries.
- Supports plate allowlist and blocklist configuration.
- Supports Micro SD cards of up to 2TB.
- IP67 and IK10 protection.

Specifications

Model	IPC2641-Z28-P-K	IPC2641-Z28-P-K
Camera		
Sensor	1/1.8-inch 4MP CMOS	
Focal length	2.8 to 12mm	
Shutter	Auto, range: 1/200 to 1/100000s	
Minimum illumination	0.0005lux (F1.4)	
FOV	Horizontal FOV: 106.4° to 50.3°, Vertical FOV: 57.1° to 27.8°, Diagonal FOV: 127.4° to 57.3°	
WDR	120 dB	
S/N	> 50 dB	
Image		
Image collection format	2688*1520@60,2688*1520@50,2688*1520@30 (default),2688*1520@25	
Frame rate	60, 50, 30 (default), 25, 22, 20, 18, 16, 15, 12.5, 10, 8, 6, 5, 4, 3, 2, 1	
Video compression	H.264 (default), H.265	
ROI	Supports up to 8 regions	
HLC	Support	
BLC	Support	
Defog	Digital defog	
Digital Noise Reduction	3D DNR	
Video OSD	Supports 8 overlay areas and allows contents including date, time, date&time, zoom ratio, custom contents	
Image OSD	Supports 8 overlay areas and allows contents including time, license plate number, device ID, camera ID, allowlist, image authentication ID, custom contents (3 items), location	
Display Parameters		
Resolution	Main stream: 2688*1520, 1080P (default), 720P, D1; Sub stream: 720P (default), D1, 2CIF, CIF; Third stream: D1 (default), 2CIF, CIF	
Smart		
Application scenario	≤ 30km/h for entrances and exits, ≤ 80km/h for regular roads; Supports simultaneous application to road and entry/exit scenes without switching	
Vehicle detection mode	Supports video detection	
License plate number recognition	Supports recognition of license plates with numbers and letters by default	
List	Supports allowlist and blocklist configuration, each list allows 20,000 items	

configuration	Supports import, export, add, and delete operations	
Barrier opening policy	Open barrier only for the recognized vehicles Open barrier for all vehicles Open barrier only for vehicles on the allowlist Open barrier for vehicles not on the blocklist Configurable Boolean output ID	
Country and Region Supported	United States, Canada, Saudi Arabia, United Arab Emirates, Qatar, Singapore, Malaysia, Indonesia, Vietnam, Thailand, India, Bangladesh, Cambodia, South Korea, Kyrgyzstan, Tajikistan, Kazakhstan, Uzbekistan, Turkmenistan, Egypt, Tunisia, Brazil, Argentina, Mexico, Finland, Estonia, Latvia, Lithuania, Poland, France, Spain, Portugal, Germany, United Kingdom, Ireland, Bulgaria, Romania, Hungary, Serbia, Bosnia and Herzegovina, Greece, Croatia, Italy, Netherlands, Sweden, Belgium, Austria, Norway, Denmark, Slovenia, Czechia, Slovakia, New Zealand, Australia, Philippines, Nepal, Israel, Albania, Moldova, Turkey, Switzerland, Georgia, Bahrain, Morocco	
Key Functional Parameters		
Detection Direction	Bidirectional、Top to Bottom、Bottom to Top	
Intelligent		
Vehicle Type Recognition	Car/Van/Large Bus/Medium Bus/Heavy Truck/Light Truck/SUV/MPV/Pickup/Motorcycle	
Vehicle Color Recognition	Red, Yellow, green, blue, purple, pink, brown, white, Grey, black, silver, orange	
Vehicle Manufacturer Recognition	133 Manufacturers: Audi, ALFA ROMEO, AION, ANKAI, ACURA, Aston Martin, ARCFOX, BYD, BUICK, BENTLEY, BMW, BAIC MOTOR, BUGATTI, BORGWARD, Beiben Truck, Besturn, CHANGAN, Citroën, Cadillac, CHERY, CHRYSLER, Chevrolet, CHTC, DONGFENG, DACIA, Daihatsu, DATSUN, DODGE, DS, DAEWOO, Dongnan, EXEED, FAW, Ford, FORLAND, Ferrari, FIAT, Foton, GEELY, GAC, GREAT WALL, GMC, Geometry, HONDA, HYUNDAI, HIGER, Hino, Hong Qi, Haval, Haima, INFINITI, Isuzu, IVECO, IM, JAC, JEEP, JAGUAR, JOYLONG, JMC, JETTA, JETOUR, KIA, Karry, King Long, KMULLER, LYNK&CO, LINCOLN, LEXUS, LOTUS, LANDWIND, LANDROVER, LAMBORGHINI, LIFAN, LEVC, LUXGEN, LEOPARD, LADA, LUMMA, LI AUTO, LEAPMOTOR, Mercedes-Benz, MINI, MAZDA, McLaren, MASERATI, MAN, MG, MITSUBISHI, MAXUS, MORGAN, MUSTANG, MODERN AUTO, NISSAN, NIO, OPEL, ORA, OUSHANG, PEUGEOT, PORSCHE, Polestar, QOROS, Roewe, ROLLS ROYCE, RENAULT, SINOTRUK, SXACT, SKODA, SSANGYONG, SMART, SUZUKI, SUBARU, SAAB, SCANIA, SEAT, SWM, SANY, SILVER, SKYWORTH, TOYOTA, TESLA, TANK, Volkswagen, VOLVO, VOYAH, Wuling, WEY, XCMG, Xiaopeng Motors, XINYUAN, YUTONG, ZHONGTONG, ZOTYE, ZEEKER, ZHONGHUA, ZHINUO	
Storage		
Edge storage	Supports ANR with a Micro SD card, up to 2TB	
Structure		
Illumination	Built-in integrated illumination module, including 4 warm light LEDs, 50m illumination distance, automatic on/off control	Built-in integrated illumination module, including4 IR LEDs, 50m illumination distance, automatic on/off control
Bracket	3-axis mounting bracket	
Junction box	The camera comes with a junction box for storing tail cable	
Network		
Protocols	IGMP,IPv6,ICMP,ARP,TCP,UDP,DHCP,PPPoE,RTSP,DNS,DDNS,NTP,UPnP,HTTP,HTTPS,802.1x,SNMP,QoS,SSL/TLS,SSH,IPv4	

Compatible Integration	ONVIF (Profile S, Profile G, Profile T),SDK, API
Interface	
Network interface	1×10M/100M RJ45
Serial port	2 × RS485
Boolean output	2 relay outputs, withstand voltage: AC 125V/0.3A, DC 30V/1A
Boolean input	2 x input, supports level (up to DC 5V) and switch signal
Audio interface	1 × audio input, 1 × audio output
Storage interface	1 × Micro SD card slot
Reset button	Support
Hardware Specification	
Wiegand Interface	Supports Wiegand output
General	
Weight	1.87kg
Ingress protection	IP67, IK10
Power supply	DC12V + 25% - 25% Max. power consumption: 20W Supports PoE (802.3at, class 4)
Dimensions (L×W×H)	406mm x 126mm x 130mm
Operating environment	-40℃ to 60℃, ≤90% RH
Heater	N/A
Compliance	
NDAA Compliant	Support
Certification	
EMC	CE-EMC (EN 55032:2015+A11:2020+A1:2020,EN 61000-3-3:2013+A1:2019+A2:2021,EN IEC 61000-3-2:2019+A1:2021, EN 50130-4:2011+A1:2014) FCC(FCC CFR 47 part15 B,ANSI C63.4 2014)
Safety	EN IEC 62368-1:2020+A11:2020 UL (UL 62368-1, 2nd Ed., Issue Date: 2014-12-01)
Environment	CE-RoHS (2011/65/EU;(EU)2015/863);WEEE (2012/19/EU)
Protection	IP67(IEC60529:1989+AMD1:1999+AMD2:2013) IK10(IEC 62262:2002+AMD1:2021)

Dimensions

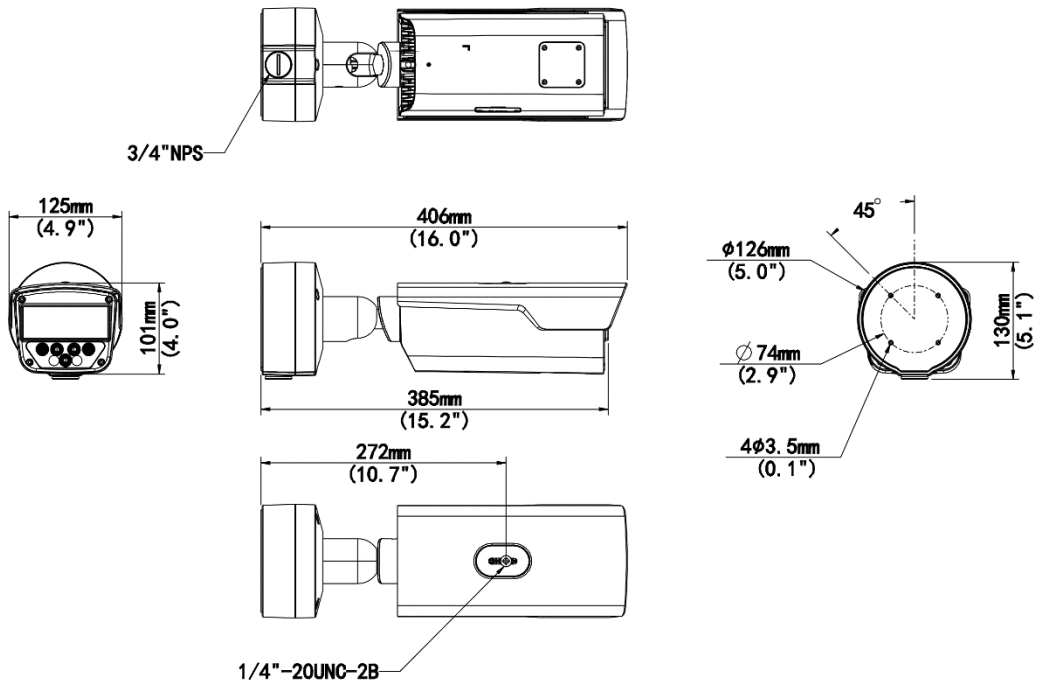

Accessories

TR-UP06-C-IN	TR-UP06-C-IN-V2	
Pole Mounting Bracket for Bullet Junction Box Only	Pole Mounting Bracket for Bullet Junction Box Only	
		

Unlimited New View

Zhejiang Uniview Technologies Co., Ltd.

http://www.uniview.com

overseasbusiness@uniview.com; globalsupport@uniview.com

No. 369, Xietong Road, Xixing Sub-district, Binjiang District, Hangzhou City, 310051, Zhejiang Province, China

©2023-2025 Zhejiang Uniview Technologies Co., Ltd. All rights reserved.

*Product specifications and availability are subject to change without notice.

Despite our best efforts, technical or typographical errors may exist in this document. Uniview cannot be held responsible for any such errors and reserves the right to change the contents of this document without prior notice.