5MP LightHunter VF IR Dome Analog Camera
UAC-D315-ADZLM-WM





Overview

5MP LightHunter VF IR dome analog camera with a high performance 1/2.7 inch CMOS sensor and 3D noise reduction technology. It supports TVI/AHD/CVI/CVBS, which effectively enhances product adaptability and diversity of networking solutions. With SYV 75 3 or other coaxial cable types, the camera can achieve low cost, long distance, and anti interference mega pixel HD video transmission without time delay. It supports IR cut filter with auto switch (ICR) and provides color images at daytime and black/white images at night. The camera also supports audio input and synchronous transmission of audio and video.

Features

- High quality imaging with 5MP resolution
- 2.8mm-12mm motorized lens
- TVI/AHD/CVI/CVBS
- Supports IR cut filter with auto switch (ICR)
- LightHunter monitoring with high sensitivity sensor
- 3D noise reduction technology delivers clean and sharp images
- Supports 180° horizontal flip, 180° vertical flip
- OSD configuration menu, easy to operate
- Water and dust resistant (IP67) and vandal resistant (IK10)
- OSD configuration menu in 11 languages
- Built in microphone for high quality audio transmission via coaxial cables

Specifications

Model	UAC-D315-ADZLM-WM
Camera	
Max Resolution	5 MP
Sensor Size	1/2.7" CMOS
Min. Illumination	0.005 lux (F1.6, AGC ON) 0 lux (IR on)
Lens	
Focus	2.8 to 12 mm
Lens Mount	Φ14
Angle of View (H)	107.8° ~ 36.5°
Angle of View (V)	58.5° ~ 20.5°
Angle of View (D)	127.0° ~ 41.3°
Illuminator	
Illuminator Number	Two IR illuminators
Illumination Distance	50m
Lifetime	≥ 60000 hours
Video	
Resolution	5MP@25fps: 2880(H)×1620(V); 5MP@20fps: 2592(H)×1944(V); 4MP: 2560(H)×1440(V) 1080P: 1920(H)×1080(V)
Frame Rate	CVI: 5MP@25fps (default), 5MP@20fps, 4MP@25fps, 4MP@30fps, 1080P@25fps, 1080P@30fps TVI: 5MP@20fps 4MP@25fps, 4MP@30fps, 1080P@25fps, 1080P@30fps AHD: 5MP@20fps, 4MP@25fps, 4MP@30fps, 1080P@25fps, 1080P@30fps CVBS: PAL, NTSC
Shutter Time	PAL: 1/25 s-1/50000 s, NTSC: 1/30 s-1/50000 s
Image	
Exposure Mode	Four modes: Global (default), BLC, HLC, WDR
Day/Night	Three modes: Auto (default), Day, Night
Digital Noise Reduction	2D/3D
White Balance	Two modes: Auto (default), Manual
WDR	120 dB WDR
Smart IR	Support
Flip	Supports 180°horizontal flip, 180°vertical flip
Digital Defog	N/A
Audio	
Built-in Mic	Support
Camera Audio	CVI: 5MP@25fps,5MP@20fps, 4MP@25fps, 4MP@30fps
Interface	
Power Interface	5.5 mm Power Interface
Video Output	BNC, supports TVI/AHD/CVI/CVBS
Operating Environment	

Temperature	-30 ℃ to 60 ℃ (-22 ℉ to 140 ℉)
Humidity	≤ 95% RH (non-condensing)
Surge Protection	4 KV for power, 4 KV for video output interfaces
General	
Power	DC 12 V±25%
Power Consumption	MAX 4.7W
Mount	Wall Mount, Pole Mount, Corner Mount, Pendant Mount
Dimensions	Φ128 x 100mm (Ø5.0” x 3.9”)
Material	Metal + Plastic
Weight	530g(1.17lb)
OSD Menu Language	11 Languages: English, German, Spanish (Latin America), French, Italian, Japanese, Korean, Polish, Portuguese (Brazil), Russian, Turkish
Certification	
EMC	CE-EMC (EN 55032, EN 61000-3-3, EN IEC 61000-3-2, EN 55035), FCC (FCC 47 CFR part15 B)
Safety	CE-LVD (EN 62368-1)
Environment	CE-RoHS (2011/65/EU; (EU) 2015/863); WEEE (2012/19/EU)
Protection	IP67 (IEC 60529), IK10 (IEC 62262)

Dimensions

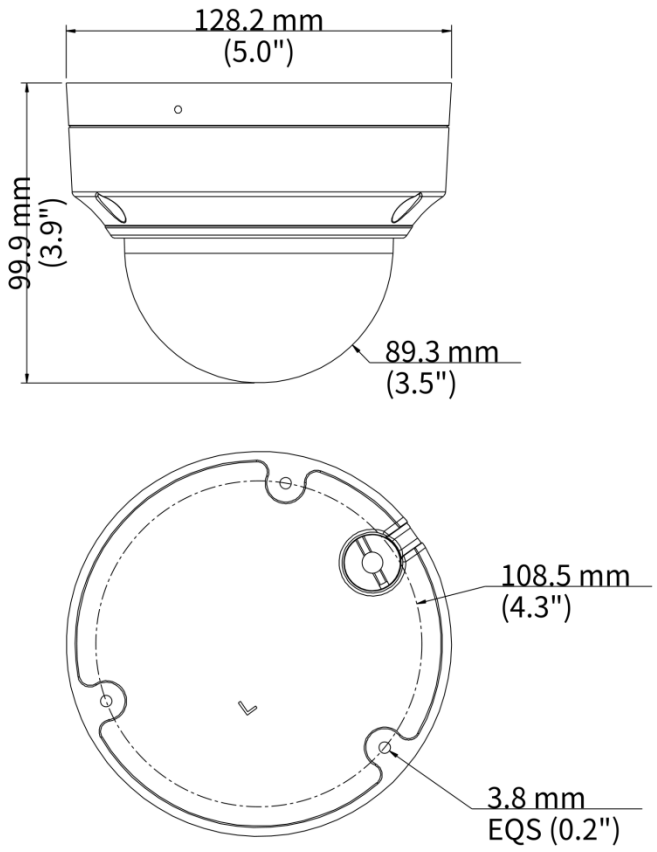

Accessories

TR-JB03-H-IN-V2 Junction Box for Metal Turret Camera(Support wiring from behind)	**TR-A01-IN** NPT 3/4'' Waterproof Cable Gland	**TR-CM24-IN** Dome Pendent Mounting Bracket(Indoor)
		
TR-SE24-A-IN Dome Pendent Mounting Pole 500mm	**TR-SE24-IN** Dome Pendent Mounting Pole 200mm	**TR-UC08-C-V2** Bullet&Dome Corner Mounting Bracket
		
TR-JB07/WM03-F-IN-V2 Wall Mounting Assembling Bracket with Back Hole for 3 Inch Hemisphere	**TR-WM03-B-IN-V2** Wall Mounting Assembling Bracket for 3 Inch Hemisphere	**HS-207S** Sunshade Shell for Zoom Dome
		
TR-UP06-C-IN-V2 Pole Mounting Bracket for Bullet Junction Box Only	**PWR-DC1201A-UK** DC12V/1A Wall Plug British Standard Power Adapter	**PWR-DC1201B-UK** UNV DC12V/1A Wall Plug British Standard Power Adapter(Colorful Bag)
		
PWR-DC1201A-US DC12V/1A Wall Plug American Standard Power Adapter	**PWR-DC1201B-US** UNV DC12V/1A Wall Plug American Standard Power Adapter(Colorful Bag)	**PWR-DC1201A-EU** DC12V/1A Wall Plug European Standard Power Adapter
		

PWR-DC1201B-EU	PWR-DC1201A-IND	
UNV DC12V/1A Wall Plug European Standard Power Adapter(Colorful Bag)	UNV DC12V/1A Wall Plug Indian Standard Power Adapter-Colorful Bag	
		

Unlimited New View

Zhejiang Uniview Technologies Co., Ltd.

http://www.uniview.com

overseasbusiness@uniview.com; globalsupport@uniview.com

No. 369, Xietong Road, Xixing Sub-district, Binjiang District, Hangzhou City, 310051, Zhejiang Province, China

©2025-2026 Zhejiang Uniview Technologies Co., Ltd. All rights reserved.

*Product specifications and availability are subject to change without notice.

Despite our best efforts, technical or typographical errors may exist in this document. Uniview cannot be held responsible for any such errors and reserves the right to change the contents of this document without prior notice.