# 4MP ANPR LightHunter AI-Powered Network Bullet Camera

# IPS-HC264-C






## Features

- High quality image with 4 MP, 1/1.8” CMOS sensor
- 2688 × 1520@60 fps in the main stream, which can offering more details of fast moving objects
- Ultra 265, H.265, H.264, MJPEG
- ANPR supports capturing and recognizing car license plate according to the set country or area
- Adjustable far and near lights, suitable for different capture situation
- 2,8 to 12 mm focal lens, suitable for road scenarios
- AI-Powered image technology, comprehensive improvement in image quality
- Audio 2 in and 1 out, Alarm 3 in and 2 out
- Built in heater, support normal start up at low temperature
- Micro SD, up to 512 GB
- DC 12V or PoE (IEEE 802.3at) power supply
- Supports bidirectional license plate recognition (LPR/ANPR), enabling accurate capture and recognition of vehicles traveling in both entry and exit directions.
- Dedicated LPR exposure algorithm with automatic adjustment for backlight and changing lighting conditions, optimizing license plate capture in entry and exit scenarios.
- Embedded local processing for License Plate Recognition (LPR) and vehicle access control, supporting offline operation.
- IP67, IK10
- * In according to get the best intelligent performance, please refer to engineering survey guide.

# Specifications

| Model | IPS-HC264@HDX4-IR-I1-C | IPS-HC264@HDX4-WH-I1-C |
|---|---|---|
| Camera | | |
| Max Resolution | 4 MP | |
| Sensor | 1/1.8" CMOS | |
| Min. Illumination | Colour:0.0005 lux (F1.6, AGC ON)<br>B/W:0.0003 lux (F1.6, AGC ON)<br>0 lux with IR | Colour:0.0005 lux (F1.6, AGC ON)<br>0 lux with Light |
| Day/Night | IR-cut filter with auto switch (ICR) | |
| Shutter | Auto/Manual, 1 to 1/100000 s | |
| WDR | 160 dB | |
| Adjustment Angle | Pan: 0° to 360°<br>Tilt: 0° to 90°<br>Rotate: 0° to 360° | |
| S/N | >56 dB | |
| Case Type | Bullet | |
| Lens | | |
| Focal Length | 2.8 to 12 mm | |
| Digital Zoom | 16X | |
| Optical Zoom | 4X | |
| Iris | F1.6 | |
| Field of View (H) | 104° to 49° | |
| Field of View (V) | 55° to 26° | |
| Field of View (D) | 128° to 58° | |
| Iris Type | P-iris | |
| DORI | | |
| DORI Distance (Detect) | 124.1m(407.3ft)~496.6m(1629.1ft) | |
| DORI Distance (Observe) | 49.7m(162.9ft)~198.6m(651.6ft) | |
| DORI Distance (Recognize) | 24.8m(81.5ft)~99.3m(325.8ft) | |
| DORI Distance (Identify) | 12.4m(40.7ft)~49.7m(162.9ft) | |
| Illuminator | | |
| Illumination Distance (Warm Light) | | 40 m (131.2 ft.) |
| Illumination Distance (IR) | 40 m (131.2 ft.) | |
| Wavelength | 850 nm | |
| Video | | |
| Video Compression | Ultra 265, H.265, H.264, MJPEG | |
| Video Bit Rate | 128 Kbps to 16 Mbps | |
| U-code | Support | |
| ROI | Up to 8 areas | |
| Video Stream | Triple streams | |
| Privacy Mask | Up to 8 areas (8 blacks / 8 mosaics) | |

| | | |
|---|---|---|
| OSD | Up to 10 OSDs | |
| Frame Rate-Main Stream | 4MP(2688*1520), Max 60fps | |
| Frame Rate-Sub Stream | 2MP(1920*1080), Max 60fps; | |
| Frame Rate-Third Stream | D1 (720*576), Max 60fps | |
| Frame Rate Recommendation | 2688*1520@60fps+1080P@60fps+D1@60fps | |
| Image | | |
| White Balance | Auto,Outdoor,Fine Tune,Sodium Lamp,Locked,Auto2 | |
| Digital Noise Reduction | 2D/3D DNR | |
| Flip | Normal,Flip Vertical,Flip Horizontal,180°,90°Clockwise,90°Anti-clockwise | |
| HLC | Support | |
| BLC | Support | |
| Smart IR | Support | N/A |
| Defog | Digital defog | |
| Intelligent | | |
| ANPR | Up to 4 car lanes can be set: Support pedestrian, motor vehicle and non motor vehicle image capturing; Support recognizing car license plate more accurately by choosing different country/ region; Support attribute collection and search: plate number, vehicle type, vehicle color, vehicle brand | |
| List configuration | Supports allowlist and blocklist configuration, each list allows 20,000 items<br>Supports import, export, add, and delete operations | |
| Supports Multiple Countries | North America: United States, Canada;South America: Mexico, Brazil; EU: France, Spain, Portugal, Germany, UK, Ireland, Bulgaria, Latvia, Romania, Slovenia, Poland, Hungary, Serbia, Czech Republic, Slovakia, Bosnia and Herzegovina, Greece, Croatia, Ukraine, Lithuania, Georgia; Asia Pacific: South Korea, Indonesia, Malaysia, Singapore, Viet Nam, Bangladesh, India, Nepal, Philippines, Thailand, Cambodia;Middle East: Iraq, Saudi Arabia, United Arab Emirates, Egypt, Qatar, Tunisia, Yemen; Kuwait, Oman, Bahrain; Middle Asia: Kazakhstan, Kyrgyzstan, Tajikistan, Uzbekistan, Turkmenistan | |
| Capture Speed Range | ≤ 120 km/h | |
| Events | | |
| Basic Detection | Motion detection,Audio detection,Tampering alarm | |
| General Function | Watermark,IP Address Filtering,Access Policy,ARP Protection,RTSP Authentication,User Authentication,HTTP authentication,Alarm input,Alarm output | |
| Audio | | |
| Audio Compression | G.711U,G.711A | |
| Audio Bitrate | 128 Kbps | |
| Two-way Audio | Support | |
| Suppression | Support | |
| Sampling Rate | 16KHZ | |
| Storage | | |
| Edge Storage | MicroSD, up to 512 GB | |
| Network Storage | ANR,NAS(NFS) | |
| Network | | |
| Protocols | IGMP, RTP, SMTP, IPv4, IPv6, ICMP, ARP, TCP, UDP, DHCP, PPPoE, RTSP, RTCP, RTMP, DNS, DDNS, | |

| | |
|---|---|
| | NTP, FTP, UPnP, HTTP, HTTPS, 802.1x, SNMP, QoS, SSL/TLS, SSH |
| Compatible Integration | ONVIF (Profile S, Profile G, Profile T, Profile M), API, SDK |
| User/Host | Up to 32 users. 3 user levels: administrator, common user and operator |
| Security | Password Protection, Strong Password, HTTPS Encryption, Export Operation Logs, Basic and Digest Authentication for RTSP, Digest Authentication for HTTP, TLS 1.2, WSSE and Digest Authentication for ONVIF, TLS 1.3 |
| Client | EZStation, UNV-Link, UNV-Link Pro |
| Web Browser | Plug-in required live view: IE 10+, Chrome 45+, Firefox 52+, Edge 79+ |
| PTZ | |
| Home Position | Support |
| Number of Presets | 1024 |
| Interface | |
| Audio I/O | 2 Input: impedance 1 kΩ, amplitude 2.5 V [p-p], 1 Output: impedance 600 Ω, amplitude 2.5 V [p-p] |
| Alarm I/O | 3/2 |
| Serial Port | 1 × RS485 |
| Built-in Mic | Support, built-in mic*2 |
| Built-in Speaker | Support |
| Network | 1 × RJ45 10 M/100 M/1000 M Base-TX Ethernet |
| Wiegand Interface | Supports Wiegand output |
| Certification | |
| EMC | CE-EMC (EN 55032:2015+A11:2020+A1:2020,EN 61000-3-3:2013+A1:2019+A2:2021,EN IEC 61000-3-2: 2019+A1: 2021, EN 50130-4:2011+A1:2014)<br>FCC (FCC CFR 47 part15 B, ANSI C63.4 2014) |
| Safety | EN IEC 62368-1:2020+A11:2020<br>UL (UL 62368-1, 2nd Ed., Issue Date: 2014-12-01 ) |
| Environment | CE-RoHS (2011/65/EU;(EU)2015/863); WEEE (2012/19/EU); Reach (Regulation (EC) No 1907/2006) |
| Protection | IP67 (IEC 60529:1989+AMD1:1999+AMD2:2013)<br>IK10 (IEC 62262:2002) |
| General | |
| Power | DC12V(±25%) , PoE+ (IEEE 802.3at) |
| Power Consumption | Max 19W / Max 21W |
| Power Interface | Ø5.5 mm coaxial power plug |
| Dimensions | 406 x 125 x 130mm(16.0” x 4.9” x 5.1”) |
| Weight | 1.86Kg(4.10lb) |
| Working Environment | -40℃ ~ 70℃ (-40°F ~ 158°F), Humidity: ≤95% RH (non-condensing) |
| Storage Environment | -40℃ ~ 70℃ (-40°F ~ 158°F), Humidity: ≤95% RH (non-condensing) |
| Surge Protection | 6 KV |
| Reset Button | Support |
| RTC | Support |
| Material | Sun shield：Plastic<br>Front cover：Metal<br>Body：Metal |
| Heater | Support |

| | |
|---|---|
| Live View | |
| Maximum Bitstream | 35 |
| Maximum Bandwidth | 50 Mbps |
| OSD Font | Vector |
| OSD Color | Support |
| OSD Character Number | 40 |
| Other | |
| Corridor Mode | Support |
| Configurable | |
| P/N | Support |

# Dimensions

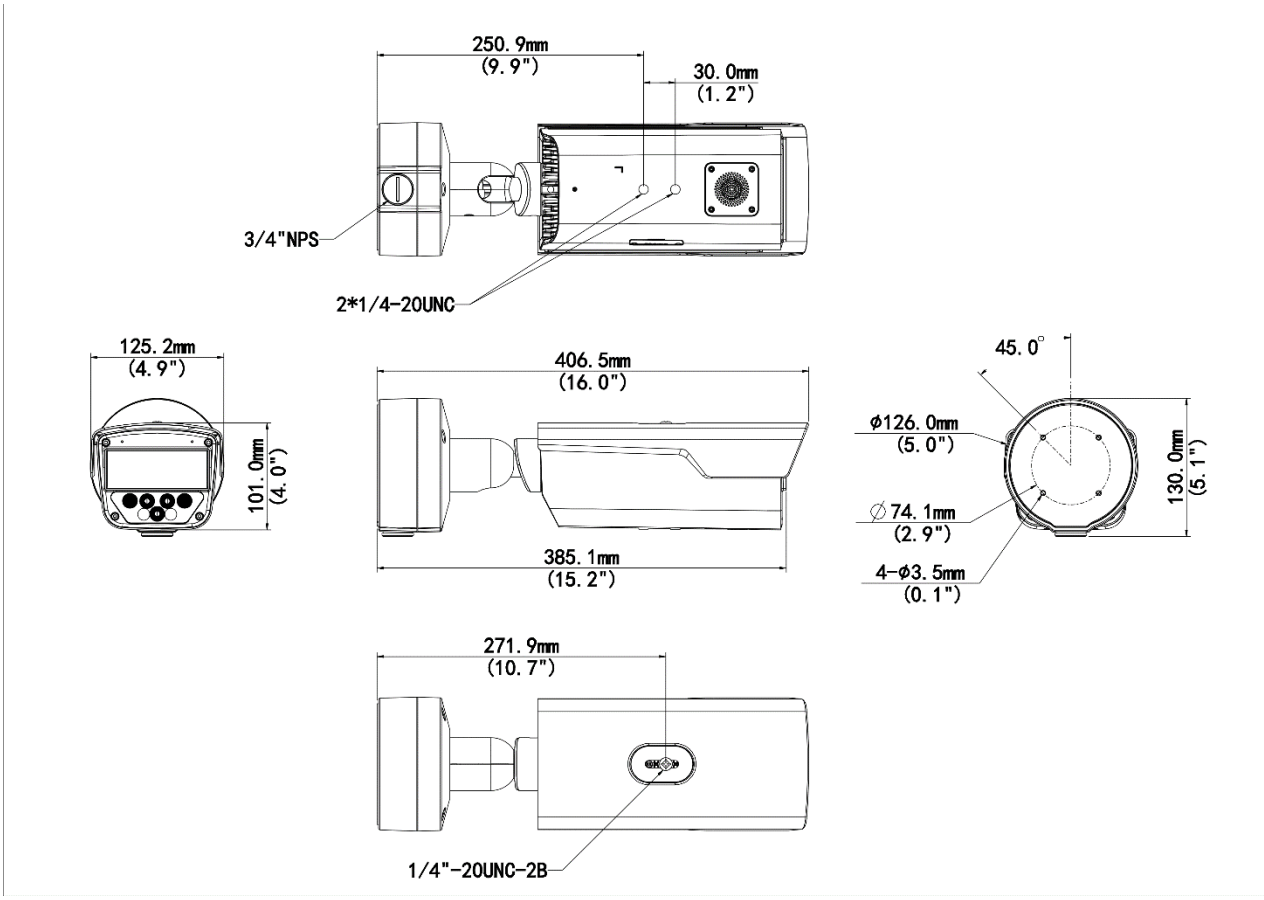


# Accessories

| TR-UP06-C-IN-V2 | TR-UC08-C-V2 | TR-UV06-A-IN |
|---|---|---|
| Pole Mounting Bracket for Bullet Junction Box Only | Bullet&Dome Corner Mounting Bracket | 3D Adjustable Mounting Bracket |
|  | 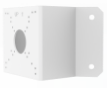 | 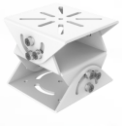 |

| TR-UP06-IN<br>Universal Pole Mounting Bracket | | |
|---|---|---|
|  | | |

# Unlimited New View

**Zhejiang Uniview Technologies Co., Ltd.**

http://www.uniview.com

overseasbusiness@uniview.com; globalsupport@uniview.com

No. 369, Xietong Road, Xixing Sub-district, Binjiang District, Hangzhou City, 310051, Zhejiang Province, China

©2023-2025 Zhejiang Uniview Technologies Co., Ltd. All rights reserved.

*Product specifications and availability are subject to change without notice.

Despite our best efforts, technical or typographical errors may exist in this document. Uniview cannot be held responsible for any such errors and reserves the right to change the contents of this document without prior notice.