5MP WDR LightHunter IR Network Bullet Camera

IPC2B25SA-AHDZK-PI-I1-S



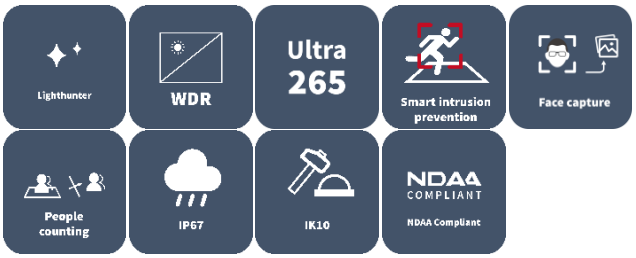

Features

- High quality image with 5 MP, 1/2.7" CMOS sensor
- 2880 × 1620@60 fps in the main stream, delivers detailed live while 60 fps keeping it smooth and closer to the real image
- Motorized lens with P-iris, supports accurate control of exposure
- Ultra 265, H.265, H.264, MJPEG
- Smart intrusion prevention, supports false alarm filtering, including cross line, intrusion, enter area, leave area detection
- People counting, supports people flow counting and crowd density monitoring, suitable for different statistical scenarios
- LightHunter technology ensures ultra-high image quality in low-light environment
- Up to 130 dB optical WDR (wide dynamic range)
- DC 12 V, PoE (IEEE 802.3af) power supply
- Alarm I/O: 1/1, audio I/O: 1/1
- IP67, IK10
- Intelligent function supported when frame rate is below 30 fps
- MicroSD, up to 512 GB

Specifications

Model	IPC2B25SA-AHDZK-PI-I1-S
Camera	
Max Resolution	5 MP
Sensor	1/2.7" CMOS
Min. Illumination	Color: 0.002 Lux (F1.2, AGC ON), 0 Lux with IR on
Day/Night	IR-cut filter with auto switch (ICR)
Shutter	Auto/Manual, 1 to 1/100000 s
WDR	130 dB
Adjustment Angle	Pan: 0° to 360°, Tilt: 0° to 90°, Rotate: 0° to 360°
S/N	>56 dB
Lens	
Focal Length	2.7 to 13.5 mm
Optical Zoom	5X
Iris	F1.2
Field of View (H)	106.3° to 32.5°
Field of View (V)	53.5° to 18.0°
Field of View (D)	126.0° to 38.5°
Iris Type	P-iris
DORI	
DORI Distance (Lens)	2.7 to 13.5 mm
DORI Distance (Detect)	60.8 m to 303.8 m (199.5 ft. to 996.7 ft.)
DORI Distance (Observe)	24.3 m to 121.5 m (79.7 ft. to 398.6 ft.)
DORI Distance (Recognize)	12.2 m to 60.8 m (40.0 ft. to 199.5 ft.)
DORI Distance (Identify)	6.1 m to 30.4 m (20.0 ft. to 99.7 ft.)
Video	
Video Compression	Ultra 265, H.265, H.264, MJPEG
Video Bit Rate	128 Kbps to 16 Mbps
U-code	Support
ROI	Up to 8 areas
Video Stream	Triple streams
Privacy Mask	Up to 8 areas (8 blacks / 8 mosaics)
OSD	Up to 10 OSDs
Frame Rate-Main Stream	5 MP (2880 × 1620), max. 60 fps
Frame Rate-Sub Stream	1080P (1920 × 1080), max. 60 fps
Frame Rate-Third Stream	D1 (720 × 576), max. 60 fps
Intelligent	
Smart Intrusion Prevention	Cross line detection, intrusion detection, enter area detection, leave area detection (support false alarm filtering and the classification of human, non-motor vehicle and vehicle)
People Counting	Support people flow counting and crowd density detection
Image	
White Balance	Auto, Outdoor, Fine tune, Sodium lamp, Locked, Auto2

Digital Noise Reduction	2D/3D DNR
Flip	Flip vertical, Flip horizontal, Normal, 180°, 90° Clockwise, 90° Anti-clockwise
HLC	Support
BLC	Support
Defog	Digital defog
Events	
Basic Detection	Motion detection, Audio detection, Tampering alarm, Ultra motion detection
General Function	Watermark, IP address filtering, Access policy, ARP protection, RTSP authentication, User authentication, HTTP authentication, Alarm input, Alarm output
UMD (Ultra Motion Detection)	Support
Audio	
Audio Compression	G.711U, G.711A
Audio Bitrate	128 Kbps
Two-way Audio	Support
Suppression	Support
Sampling Rate	16 kHz
Storage	
Edge Storage	MicroSD, up to 512 GB
Network Storage	ANR, NAS (NFS)
Network	
Protocols	SSH, IGMP, RTP, RTCP, SMTP, IPv4, IPv6, ICMP, ARP, TCP, UDP, DHCP, PPPoE, RTSP, RTMP, DNS, DDNS, NTP, FTP, UPnP, HTTP, HTTPS, 802.1x, SNMP, QoS, SSL/TLS
Compatible Integration	ONVIF (Profile S, Profile G, Profile T, Profile M), API, SDK
User/Host	Up to 32 users. 3 user levels: administrator, common user and operator
Security	TLS 1.3, Password Protection, Strong Password, HTTPS Encryption, Export Operation Logs, Basic and Digest Authentication for RTSP, Digest Authentication for HTTP, TLS 1.2, WSSE and Digest Authentication for ONVIF
Client	UNV-Link, UNV-Link Pro, EZStation
Web Browser	Plug-in required live view: IE 10+, Chrome 45+, Firefox 52+, Edge 79+
Illuminator	
Illumination Distance (IR)	80 m (262.5 ft.)
IR On/Off Control	Auto/Manual
Wavelength	850 nm
Supplemental Light	IR
Interface	
Audio I/O	1 Input: impedance 1 kΩ, amplitude 2.5 V [p-p], 1 Output: impedance 600 Ω, amplitude 2.5 V [p-p]
Alarm I/O	1/1
Serial Port	1 × RS485
Built-in Mic	Built-in dual-mic
Built-in Speaker	N/A
Network	1 × RJ45 10 M/100 M Base-TX Ethernet
Certification	
EMC	CE-EMC (EN 55032, EN 61000-3-3, EN IEC 61000-3-2, EN 50130)

	FCC-SDoC (47 CFR Part15, Subpart B)
Safety	CE LVD (EN IEC 62368-1) UL (UL 62368-1)
Environment	CE-RoHS (2011/65/EU;(EU)2015/863); WEEE (2012/19/EU)
Protection	IP67 (IEC 60529) IK10 (IEC 62262)
General	
Power	DC 12 V (±25%), PoE (IEEE 802.3af)
Power Consumption	Max. 10 W
Power Interface	Ø5.5 mm coaxial power plug
Built-in DC12V Output	Support
Dimensions	268 mm × 96 mm × 86 mm (10.5" × 3.7" × 3.4") (L × W × H)
Weight	1 kg (2.2 lb.)
Working Environment	-30 ℃ to 60 ℃ (-22 ℉ to 140 ℉), Humidity: ≤ 95% RH (non-condensing)
Storage Environment	-40 ℃ to 70 ℃ (-40 ℉ to 158 ℉), Humidity: ≤ 95% RH (non-condensing)
Surge Protection	6 KV
Reset Button	Support
RTC	Support
Material	Metal + Plastic
Web Client Language	22 Languages: Traditional Chinese, English, Simplified Chinese, Polish, German, Russian, French, Korean, Dutch, Czech, Portuguese (Europe), Portuguese (Brazil), Japanese, Thai, Turkish, Spanish (Latin America), Spanish (Europe), Hungarian, Italian, Vietnamese, Arabic, Slovak
Heater	N/A
Live View	
Maximum Bitstream	35
Other	
Corridor Mode	Support

Dimensions

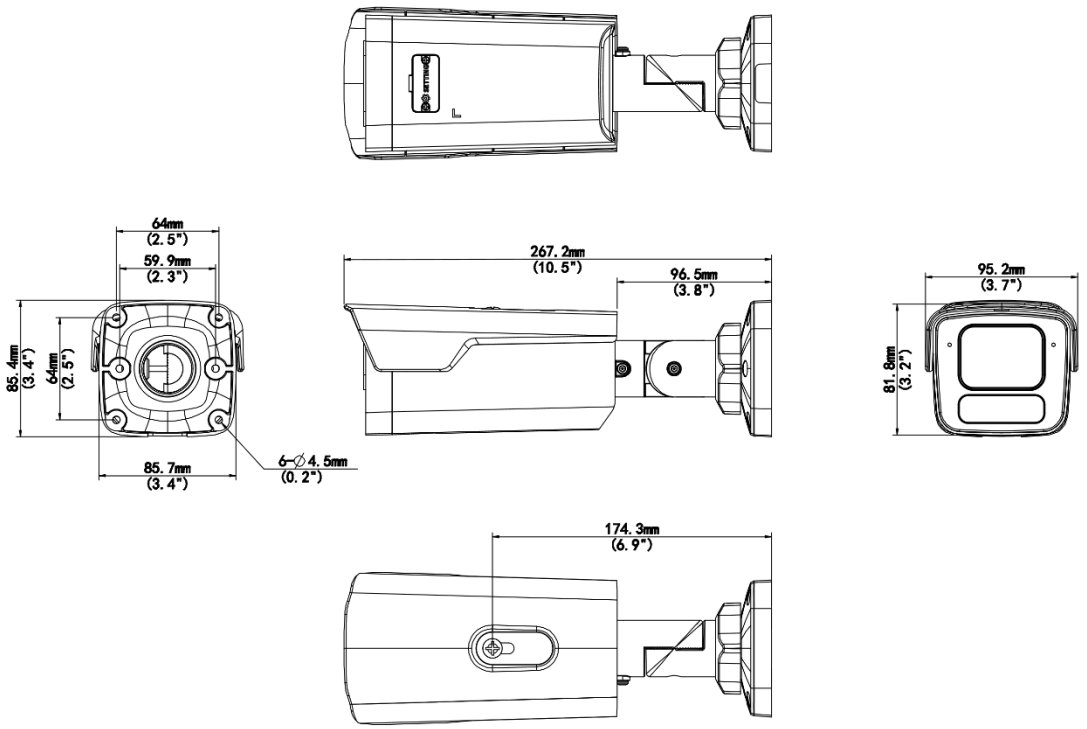

Accessories

TR-JB07-D-IN Bullet Junction Box(Support wiring from behind)	**TR-UP06-B-IN** Bullet Pole Mounting Bracket	**TR-A01-IN** NPT 3/4'' Waterproof Cable Gland
		
TR-JB06-A-IN Middle Bullet Junction Box(Elegant White)	**TR-UP06-C-IN-V2** Pole Mounting Bracket for Bullet Junction Box Only	**TR-UC08-C-V2** Bullet&Dome Corner Mounting Bracket
		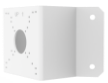

Unlimited New View

Zhejiang Uniview Technologies Co., Ltd.

http://www.uniview.com

overseasbusiness@uniview.com; globalsupport@uniview.com

No. 369, Xietong Road, Xixing Sub-district, Binjiang District, Hangzhou City, 310051, Zhejiang Province, China

©2023-2025 Zhejiang Uniview Technologies Co., Ltd. All rights reserved.

*Product specifications and availability are subject to change without notice.

Despite our best efforts, technical or typographical errors may exist in this document. Uniview cannot be held responsible for any such errors and reserves the right to change the contents of this document without prior notice.