5MP 5X Starlight IR Network Mini PTZ Dome Camera Datasheet

IPC6235LR-AX5C-VG3



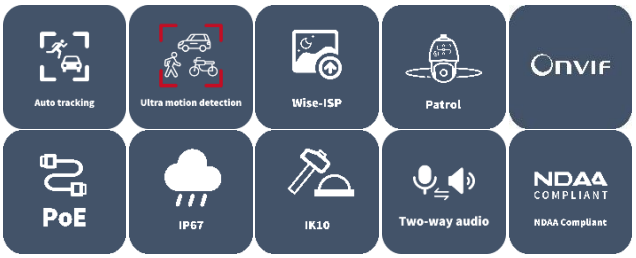

Features

- Compact, one-handed operation, and high concealability
- Supports power backfeeding (12 V, 100 mA), offering benefits such as simplified cabling and reduced maintenance costs.
- Wise-ISP image processing engine, intelligent noise reduction, stunning visual effects in low-light conditions
- Adaptive IR Illumination: IR LEDs dynamically activate by zone in sync with PTZ rotation, precisely matching the field of view with intelligent illumination adjustment—delivering consistently clear night-time imagery
- Smart intrusion prevention (SIP) : supports cross line detection, enter area, leave area, and intrusion detection, detects and captures different types of targets including motor vehicles, non-motor vehicles, pedestrians, and raises alarms
- UNV LM-Auto Tracking : Accurately identifies and continuously tracks motor vehicles, non-motor vehicles, and pedestrians-even through occlusion, multi-target crossing, or high-speed motion—with real-time, adaptive bounding boxes for stable, reliable tracking
- People counting: supports people flow counting and crowd density monitoring, applicable to various scenarios
- automatic selection of best snapshots, supports face detection masked area
- Ultra 265, H.265, H.264, MJPEG
- 5X optical zoom allows for closer viewing of subjects
- Up to 120 dB optical WDR (wide dynamic range)
- Built-in mic and speaker, supports two-way audio
- Alarm I/O: 1/1, audio I/O: 1/1
- IP67, IK10

Specifications

Model	IPC6235LR-AX5C-VG3
Camera	
Max Resolution	5 MP
Sensor	1/2.9" CMOS
Day/Night	IR-cut filter with auto switch (ICR)
Shutter	Auto/Manual, 1 to 1/100000 s
WDR	120 dB
S/N	> 56 dB
Case Type	PT
Lens	
Focal Length	2.7 to 13.5 mm
Digital Zoom	16X
Optical Zoom	5X
Iris	F1.68 to F3.18
DORI	
DORI Distance (Detect)	70.9 m to 247.5 m (232.5 ft. to 812.0 ft)
DORI Distance (Observe)	28.4 m to 99.0 m (93.2 ft. to 324.8 ft)
DORI Distance (Recognize)	14.2 m to 49.5 m (46.5 ft. to 162.4 ft)
DORI Distance (Identify)	7.1 m to 24.8 m (23.3 ft. to 81.4 ft)
Video	
Video Compression	H.265, H.264, MJPEG, Ultra 265
Frame Rate	Main Stream: 5 MP (2880 × 1620), max. 30 fps; Main Stream: 5 MP (2880 × 1620), max. 25 fps; Sub Stream Max: 720 × 576, 30 fps
Video Bit Rate	128 Kbps to 6144 Kbps
U-code	Support
Privacy Mask	Up to 4 areas
ROI	Up to 8 areas
Video Stream	Dual streams
OSD	Up to 4 OSDs
Events	
General Function	Watermark, IP address filtering, Access policy, ARP protection, RTSP authentication, User authentication, Alarm input, Alarm output, HTTP authentication
Audio	
Two-way Audio	Support
Suppression	Support
Audio Compression	G.711U, G.711A, AAC-LC
Sampling Rate	G.711U/G.711A: 8 kHz, 16 kHz, AAC-LC: 8 kHz, 16 kHz, 48 kHz
Storage	
Edge Storage	MicroSD, up to 512 GB
Network Storage	NAS (NFS)

Network	
User/Host	Up to 32 users. 3 user levels: administrator, common user and operator
Protocols	SSH, IGMP, RTP, RTMP, RTCP, IPv4, SSL/TLS, QoS, 802.1x, HTTPS, HTTP, UPnP, NTP, DDNS, DNS, RTSP, DHCP, UDP, TCP, ARP, ICMP, IPv6, SMTP, PPPoE, SNMP
Compatible Integration	SDK, API, ONVIF (Profile S, Profile G, Profile T, Profile M)
Security	Password Protection, Strong Password, HTTPS Encryption, Export Operation Logs, Basic and Digest Authentication for RTSP, Digest Authentication for HTTP, TLS 1.2, WSSE and Digest Authentication for ONVIF, TLS 1.3
Client	EZStation, UniEase, UniTools Pro
Web Browser	Plug-in required live view: IE 10+, Chrome 45+, Firefox 52+, Edge 79+, Plug-in free live view: Chrome 57+, Firefox 58+, Edge 16+
PTZ	
Preset Patrol	16 patrols, up to 64 presets for each patrol
Patrol Stay Time	200 s to 1800 s
Preset Image Freeze	N/A
Tilt Range	10° to 90°
Home Position	Support
Pan Speed	0.1°/s to 55°/s
Pan Range	355°
Tilt Speed	0.1°/s to 55°/s
Number of Presets	1024
Image	
White Balance	Auto, Outdoor, Fine tune, Sodium lamp, Locked, Auto2, Area white balance
BLC	Support
Digital Noise Reduction	2D/3D DNR
Flip	Normal, Flip vertical, Flip horizontal, 180°
HLC	Support
Defog	N/A
Low Illumination Characteristics	LightHunter
Image Stabilization	DIS
Interface	
Audio I/O	1 Input: impedance 1 kΩ, amplitude 2.5 V [p-p], 1 Output: impedance 600 Ω, amplitude 2.5 V [p-p]
Network	1 × RJ45 10 M/100 M Base-TX Ethernet
Alarm I/O	1/1
Built-in Speaker	Support
Built-in Mic	Built-in dual-mic
Intelligent	
People Counting	Support people flow counting and crowd density detection
Exception Detection	Object removed, Object Left Behind
Auto Tracking	Support
Smart Intrusion Prevention	Cross line detection, intrusion detection, enter area detection, leave area detection (support false alarm filtering and the classification of human, non-motor vehicle and vehicle)

Illuminator	
Illumination Distance (IR)	20 m (65.6 ft.)
Certification	
Safety	UL (UL 62368-1) CUL (CAN/CSA C22.2 No. 62368-1) CE-LVD (EN IEC 62368-1)
EMC	CE-EMC (EN 55032; EN IEC 61000-3-2; EN 61000-3-3; EN 50130) FCC SDoC (47 CFR Part 15; Subpart B)
Environment	CE-ROHS (2011/65/EU; (EU) 2015/863) WEEE (2012/19/EU)
Protection	IP67 (IEC 60529) ; IK10 (IEC62262)
General	
Power Interface	Ø5.5 mm coaxial power plug
Dimensions	Ø129 mm × 91 mm (Ø5.1" × 3.6") (Ø × H)
Storage Environment	-40 ℃ to 70 ℃ (-40 ℉ to 158 ℉), Humidity: ≤ 95% RH (non-condensing)
Surge Protection	4 KV
Reset Button	Support
Working Environment	-30 ℃ to 60 ℃ (-22 ℉ to 140 ℉), Humidity: ≤ 95% RH (non-condensing)
Power	DC 12 V (±25%), PoE af
Configurable	
P/N	Support
Compliance	
NDAA Compliant	Support

Dimensions

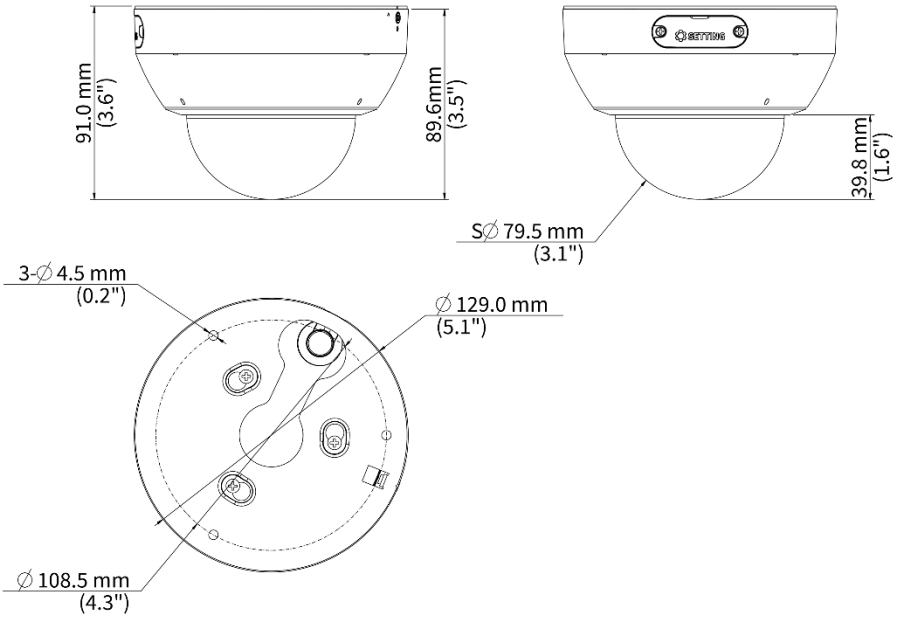

Accessories

TR-JB03-J-IN Junction Box for Metal Turret Camera(Support wiring from behind)	**TR-CM24-IN** Dome Pendent Mounting Bracket(Indoor)	**TR-SE24-A-IN** Dome Pendent Mounting Pole 500mm
TR-SE24-IN Dome Pendent Mounting Pole 200mm	**TR-JB07/WM03-F-IN-V2** Wall Mounting Assembling Bracket with Back Hole for 3 Inch Hemisphere	**TR-WM03-B-IN-V2** Wall Mounting Assembling Bracket for 3 Inch Hemisphere

Unlimited New View

Zhejiang Uniview Technologies Co., Ltd.

http://www.uniview.com

overseasbusiness@uniview.com; globalsupport@uniview.com

No. 369, Xietong Road, Xixing Sub-district, Binjiang District, Hangzhou City, 310051, Zhejiang Province, China

©2023-2025 Zhejiang Uniview Technologies Co., Ltd. All rights reserved.

*Product specifications and availability are subject to change without notice.

Despite our best efforts, technical or typographical errors may exist in this document. Uniview cannot be held responsible for any such errors and reserves the right to change the contents of this document without prior notice.