5MP ColorHunter with Wise-ISP Fixed Dome Network Camera

IPC3525LE-ADF28(40)K-WP



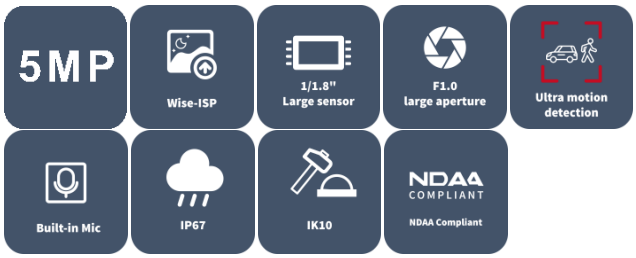

Features

- High quality image with 5 MP, 1/1.8" CMOS sensor and F1.0 large aperture lens
- 5MP (2880*1620)@25/20fps; 4MP (2560*1440)@ 25/20fps; 3MP (2304*1296) @30/25fps; 2MP (1920*1080) @30/25fps;
- Ultra 265, H.265, H.264, MJPEG
- Ultra 265, H.265, H.264, MJPEG
- Intelligent perimeter protection, including cross line, intrusion
- Based on target classification, the intelligent intrusion prevention system significantly reduces false alarms caused by leaves, birds, and lights, accurately focusing on humans and motor vehicles
- ColorHunter with Wise-ISP technology ensures 24-hour full-color images
- 120 dB true WDR technology enables clear image in strong light scene
- Supports 9:16 corridor mode
- Built-in mic
- White light, up to 30 m (98.4 ft.) warm light distance
- MicroSD, up to 512 GB
- IP67 protection
- IK10 protection
- Supports PoE power supply
- 3-axis

Specifications

Model	IPC3525LE-ADF28K-WP	IPC3525LE-ADF40K-WP
Camera		
Max Resolution	5 MP	
Sensor	1/1.8" CMOS	
Min. Illumination	Color: 0.0003 Lux (F1.0, AGC ON)	
Shutter	Auto/Manual, 1 to 1/100000 s	
Adjustment Angle	Pan: 8° to 360°, Tilt: 0° to 68°, Rotate: 10° to 360°	
S/N	> 52 dB	
WDR	120 dB	
Lens		
Focal Length	2.8 mm	4.0 mm
Iris Type	Fixed	
Iris	F1.0	
Field of View (H)	124.3°	96.1°
Field of View (V)	61.4°	52.2°
Field of View (D)	135°	113.5°
Lens Type	Fixed	
DORI		
DORI Distance (Lens)	2.8 mm	4 mm
DORI Distance (Detect)	43.4 m (142.4 ft.)	62.1 m (203.7 ft.)
DORI Distance (Observe)	17.4 m (57.1 ft.)	24.8 m (81.4 ft.)
DORI Distance (Recognize)	8.7 m (28.5 ft.)	12.4 m (40.7 ft.)
DORI Distance (Identify)	4.3 m (14.1 ft.)	6.2 m (20.3 ft.)
Illuminator		
Supplemental Light	Warm light	
Illumination Distance (Warm Light)	30 m (98.4 ft.)	
Light On/Off Control	Auto/Manual	
Video		
Video Compression	Ultra 265, H.265, H.264, MJPEG	
H.264 Code Profile	Baseline profile, Main profile, High profile	
Frame Rate	Main Stream: 5MP (2880*1620), Max 25fps; 4MP (2560*1440), Max 25fps; 3MP (2304*1296), Max 30fps; 1080P (1920*1080), Max 30fps; Sub Stream: 720P (1280*720), Max 30fps; D1 (720*576), Max 30fps; 640*360,Max 30fps; 2CIF(704*288), Max 30fps; CIF(352*288), Max 30fps;	
Video Bit Rate	128 Kbps to 6144 Kbps	
U-code	Support	
OSD	Up to 4 OSDs	
Privacy Mask	Up to 4 areas	
ROI	Support	
Video Stream	Dual streams	

Image	
White Balance	Auto, Outdoor, Fine tune, Sodium lamp, Locked, Auto2
Digital Noise Reduction	2D/3D DNR
Smart Illumination	Support
Flip	Normal, Flip vertical, Flip horizontal, 180°, 90° Clockwise, 90° Anti-clockwise
Dewarping	N/A
HLC	Support
BLC	Support
Defog	Digital defog
Events	
Basic Detection	Motion detection, Ultra motion detection (based on human body and vehicle detection), Tampering alarm, Audio detection
General Function	Watermark, IP address filtering, Access policy, ARP protection, RTSP authentication, User authentication, HTTP authentication
Intelligent	
Smart Intrusion Prevention (Lite)	Intrusion, crossline detection (both detection are based on human body and vehicle detection)
Audio	
Audio Compression	G.711U, G.711A
Audio Bitrate	64 Kbps
Two-way Audio	N/A
Suppression	Support
Sampling Rate	8 kHz
Storage	
Edge Storage	MicroSD, up to 512 GB
Network Storage	ANR, NAS (NFS)
Network	
Protocols	IPv4, IPv6, IGMP, ICMP, ARP, TCP, UDP, DHCP, PPPoE, RTSP, DNS, DDNS, NTP, UPnP, HTTP, HTTPS, SMTP, 802.1x, SNMP, QoS, SSL/TLS
Compatible Integration	ONVIF (Profile S, Profile G, Profile T), API, SDK
User/Host	Up to 32 users. 2 user levels: administrator and common user
Security	Password Protection, Strong Password, HTTPS Encryption, Export Operation Logs, Basic and Digest Authentication for RTSP, Digest Authentication for HTTP, TLS 1.2, WSSE and Digest Authentication for ONVIF
Client	EZStation, APP
Web Browser	Plug-in required live view: IE 10+, Chrome 45+, Firefox 52+, Edge 79+, Plug-in free live view: Chrome 57+, Firefox 58+, Edge 16+
Interface	
Audio I/O	N/A
Alarm I/O	N/A
Serial Port	N/A
Built-in Mic	Support
Built-in Speaker	N/A

WIFI	N/A
Network	1 × RJ45 10 M/100 M Base-TX Ethernet
Video Output	N/A
Certification	
EMC	CE-EMC (EN 55032, EN 61000-3-3, EN IEC 61000-3-2, EN 50130-4) FCC (FCC 47 CFR part15 B)
Safety	CE LVD (EN 62368-1) UL/CUL (UL 62368-1, CAN/CSA C22.2 No. 62368-1)
Environment	CE-RoHS (2011/65/EU;(EU)2015/863); WEEE (2012/19/EU);
Protection	IP67 (IEC 60529) IK10 (IEC 62262)
General	
Power	DC 12 V±25%, PoE (IEEE 802.3af)
Power Consumption	Max. 4.0 W
Power Interface	Ø5.5 mm coaxial power plug
Dimensions	Ø128 mm × 100 mm (Ø5.0" × 3.9") (Ø × H)
Weight	0.53 kg (1.16 lb.)
Material	Metal + Plastic
Working Environment	-30 ℃ to 60 ℃ (-22 ℉ to 140 ℉), Humidity: ≤ 95% RH (non-condensing)
Storage Environment	-30 ℃ to 60 ℃ (-22 ℉ to 140 ℉), Humidity: ≤ 95% RH (non-condensing)
Surge Protection	4 KV
Reset Button	Support
Web Client Language	13 Languages: English, Simplified Chinese, Polish, German, Russian, French, Korean, Dutch, Czech, Portuguese, Spanish, Spanish (Europe), Italian

Dimensions

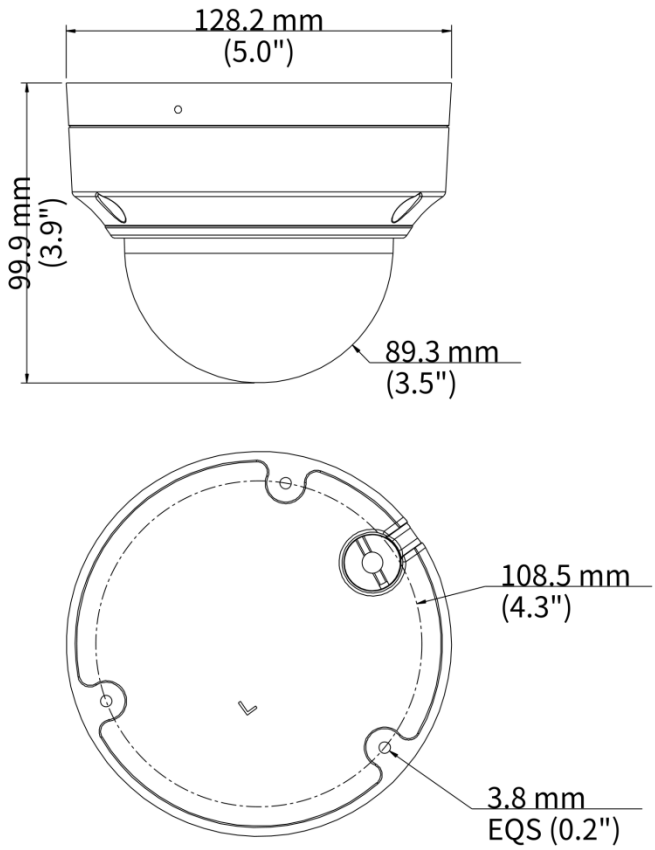

Accessories

TR-JB03-H-IN-V2	TR-CM24-IN	TR-SE24-A-IN
Junction Box for Metal Turret Camera(Support wiring from behind)	Dome Pendent Mounting Bracket(Indoor)	Dome Pendent Mounting Pole 500mm
		
TR-SE24-IN	**TR-A01-IN**	**TR-UC08-C-V2**
Dome Pendent Mounting Pole 200mm	NPT 3/4'' Waterproof Cable Gland	Bullet&Dome Corner Mounting Bracket
		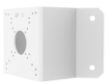

TR-JB07/WM03-F-IN-V2 Wall Mounting Assembling Bracket with Back Hole for 3 Inch Hemisphere	TR-WM03-B-IN-V2 Wall Mounting Assembling Bracket for 3 Inch Hemisphere	TR-UP06-C-IN-V2 Pole Mounting Bracket for Bullet Junction Box Only
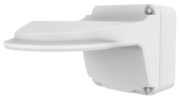		
HS-207S Sunshade Shell for Zoom Dome		
		

Unlimited New View

Zhejiang Uniview Technologies Co., Ltd.

http://www.uniview.com

overseasbusiness@uniview.com; globalsupport@uniview.com

No. 369, Xietong Road, Xixing Sub-district, Binjiang District, Hangzhou City, 310051, Zhejiang Province, China

©2023-2025 Zhejiang Uniview Technologies Co., Ltd. All rights reserved.

*Product specifications and availability are subject to change without notice.

Despite our best efforts, technical or typographical errors may exist in this document. Uniview cannot be held responsible for any such errors and reserves the right to change the contents of this document without prior notice.