DATASHEET

4MP Fixed Dual light Bullet Network Camera

IPC2314LB-AF40-DL-A1





Features

- High quality image with 4MP, 1/3" CMOS sensor
- 4MP(2560*1440)@25/20fps;3MP (2304*1296)@30/25fps; 1080P (1920*1080)@30/25fps
- Smart dual light ensure high quality image
- Ultra 265, H.265, H.264
- 2D/3D DNR (Digital Noise Reduction)
- ROI (Region of Interest)
- 3 Axis
- Built in Mic
- Wide temperature range: -30 ℃ to 60 ℃ (-22 ℉ to 140 ℉)
- Support PoE power supply
- IP67

Specifications

Model	IPC2314LB-AF40-DL-A1
Camera	
Max Resolution	4 MP
Sensor	1/3.0" CMOS

Min. Illumination	Colour: 0.003Lux (F1.6, AGC ON) 0 Lux with IR on
Day/Night	IR-cut filter with auto switch (ICR)
Shutter	Auto/Manual, 1 to 1/100000 s
Adjustment Angle	Pan: 0° to 360°, Tilt: 0° to 90°, Rotate: 0° to 360°
S/N	> 52 dB
WDR	DWDR
Lens	
Focal Length	4.0 mm
Iris Type	Fixed
Iris	F1.6
Field of View (H)	77.4 °
Field of View (V)	41.9 °
Field of View (D)	90.5 °
Lens Type	Fixed
DORI	
DORI Distance (Lens)	4.0 mm
DORI Distance (Detect)	90.0 m (295.3 ft)
DORI Distance (Observe)	36.0 m (118.1 ft)
DORI Distance (Recognize)	18.0 m (59.1 ft)
DORI Distance (Identify)	9.0 m (29.5 ft)
Illuminator	
Supplemental Light	Dual light
Illumination Distance (IR)	50 m (164 ft)
Illumination Distance (Warm Light)	15 m (49.3 ft)
Wavelength	850 nm
Video	
Video Compression	Ultra 265, H.265, H.264
H.264 Code Profile	Baseline profile, Main profile, High profile
Frame Rate	Main Stream: 4 MP (2560 × 1440), Max 25 fps; 3 MP (2304 × 1296) Max 30 fps; 1080 P (1920 × 1080), Max 30 fps Sub Stream: 640 × 360, Max 30 fps; 2CIF (704 × 288), Max 30 fps; CIF (352 × 288), Max 30 fps
Video Bit Rate	128 Kbps to 6144 Kbps
U-code	Support
OSD	Up to 4 OSDs
Privacy Mask	Up to 4 areas
ROI	Support
Video Stream	Dual streams
Image	
Smart Illumination	Support
White Balance	Auto, Outdoor, Fine tune, Sodium lamp, Locked, Auto2, Area white balance
Digital Noise Reduction	2D/3D DNR

Smart IR	Support
Flip	Normal, Flip vertical, Flip horizontal, 180°
Dewarping	N/A
HLC	Support
BLC	Support
Defog	Digital defog
Image Stabilization	N/A
Events	
Basic Detection	Motion detection, Audio detection, Human body detection 2.0
General Function	Watermark, IP address filtering, Access policy, ARP protection, RTSP authentication, User authentication, HTTP authentication
Audio	
Audio Compression	G.711U, G.711A
Audio Bitrate	64 Kbps
Two-way Audio	N/A
Suppression	Support
Sampling Rate	8 kHz
Storage	
Edge Storage	N/A
Network	
Protocols	IPv4, IGMP, ICMP, ARP, TCP, UDP, DHCP, RTP, RTSP, RTCP, RTMP, DNS, DDNS, NTP, UPnP, HTTP, HTTPS, SNMP, QoS, SSL/TLS
Compatible Integration	ONVIF (Profile S, Profile T) , API, SDK
User/Host	Up to 32 users. 3 user levels: administrator, common user and operator
Security	Password Protection, Strong Password, Export Operation Logs, Basic and Digest Authentication for RTSP, Digest Authentication for HTTP, WSSE and Digest Authentication for ONVIF
Client	EZStation, UNV-Link, UNV-Link Pro
Web Browser	Plug-in required live view: IE 10+, Chrome 45+, Firefox 52+, Edge 79+, Plug-in free live view: Chrome 57+, Firefox 58+, Edge 16+
Interface	
Audio I/O	N/A
Alarm I/O	N/A
Serial Port	N/A
Built-in Mic	Support
Built-in Speaker	N/A
WIFI	N/A
Network	1 × RJ45 10 M/100 M Base-TX Ethernet
Video Output	N/A
Certification	
EMC	CE-EMC (EN 55032, EN 61000-3-3, EN IEC 61000-3-2, EN 50130-4) FCC (FCC 47 CFR part15 B)
Safety	CE LVD (EN 62368-1)

Environment	CE-RoHS (2011/65/EU;(EU)2015/863) WEEE (2012/19/EU) Packaging and Packaging Waste (94/62/EC)
Protection	IP67 (IEC 60529)
General	
Power	PoE (IEEE 802.3af)
Power Consumption	Max 3.1 W
Power Interface	N/A
Dimensions	196.5 × 73.0× 72.9 mm (7.7” × 2.9” × 2.9”)
Weight	0.22 kg (0.49 lb)
Material	Graphene + Plastic
Working Environment	-30 ℃ to 60 ℃ (-22 ℉ to 140 ℉), Humidity: ≤ 95% RH (non-condensing)
Storage Environment	-30 ℃ to 60 ℃ (-22 ℉ to 140 ℉), Humidity: ≤ 95% RH (non-condensing)
Surge Protection	4 KV
Reset Button	N/A
Web Client Language	4 Languages: English, Russian, Spanish, Vietnamese

Dimensions

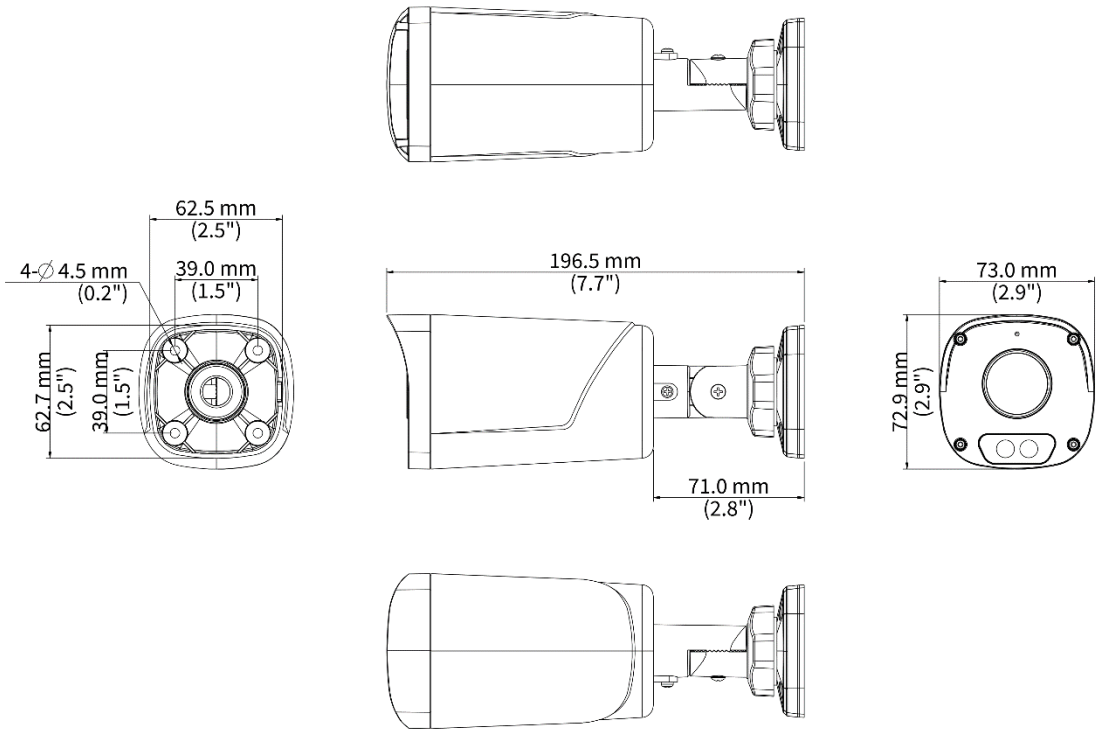

Accessories

TR-JB05-B-IN

Small Bullet Junction Box(Elegant White)



TR-UP06-C-IN

Pole Mounting Bracket for Bullet Junction Box Only



TR-A01-IN

NPT 3/4'' Waterproof Cable Gland



TR-UC08-C

Bullet&Dome Corner Mounting Bracket

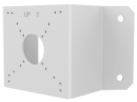

Zhejiang Uniview Technologies Co., Ltd.

No. 369, Xietong Road, Xixing Sub-district, Binjiang District, Hangzhou City, 310051, Zhejiang Province, China

Email: overseasbusiness@uniview.com; globalsupport@uniview.com

http://www.uniview.com

©2025 Zhejiang Uniview Technologies Co., Ltd. All rights reserved.

*Product specifications and availability are subject to change without notice.

*Despite our best efforts, technical or typographical errors may exist in this document. Uniview cannot be held responsible for any such errors and reserves the right to change the contents of this document without prior notice.