6MP HD ColorHunter Mini IR Fixed Bullet Network Camera

IPC2126LE-ADF28(40)KMC-DL



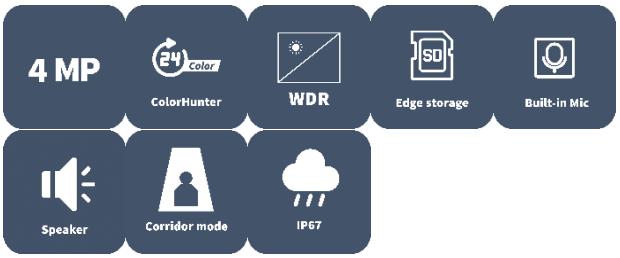

Features

- High quality image with 6 MP, 1/2.5" CMOS sensor
- 6 MP (3288 × 1860)@25/24 fps; 6 MP (3200 × 1800)@25/24 fps; 4 MP (2560 × 1440)@30/25 fps; 3 MP (2304 × 1296)@30/25 fps; 1080P (1920 × 1080)@30/25 fps; 720P (1280 × 720)@30/25 fps
- Ultra 265, H.265, H.264, MJPEG
- 120 dB true WDR technology enables clear image in strong light scene
- Supports 9:16 corridor mode
- Built-in mic and speaker
- Smart IR, up to 30 m (98.4 ft.) IR distance
- White light, up to 30 m (98.4 ft.) warm light distance
- MicroSD, up to 512 GB
- IP67 protection
- Supports PoE power supply
- 3-axis

Specifications

Model	IPC2126LE-ADF28KMC-DL	IPC2126LE-ADF40KMC-DL
Camera		
Max Resolution	6 MP	
Sensor	1/3.0" CMOS	
Min. Illumination	Color: 0.003 Lux (F1.6, AGC ON), 0 Lux with light	
Day/Night	IR-cut filter with auto switch (ICR)	
Shutter	Auto/Manual, 1 ~ 1/100000s	
Adjustment Angle	Pan: 0° to 360°, Tilt: 0° to 90°, Rotate: 0° to 360°	
S/N	>52 dB	
WDR	120 dB	
Lens		
Focal Length	2.8 mm	4.0 mm
Iris Type	Fixed	
Iris	F1.6	
Field of View (H)	97.0°	79.0°
Field of View (V)	52.2°	42.3°
Field of View (D)	107.5°	85.1°
DORI		
DORI Distance (Lens)	2.8 mm	4 mm
DORI Distance (Detect)	63.0 m (206.7 ft.)	90.0 m (295.3 ft.)
DORI Distance (Observe)	25.2 m (82.7 ft.)	36.0 m (118.1 ft.)
DORI Distance (Recognize)	12.6 m (41.3 ft.)	18.0 m (59.1 ft.)
DORI Distance (Identify)	6.3 m (20.7 ft.)	9.0 m (29.5 ft.)
Illuminator		
Supplemental Light	Dual light	
Illumination Distance (IR)	30 m (98.4 ft.)	
Illumination Distance (Warm Light)	30 m (98.4 ft.)	
Wavelength	850 nm	
Light On/Off Control	Auto/Manual	
Video		
Video Compression	Ultra 265, H.265, H.264, MJPEG	
H.264 Code Profile	Baseline profile, Main profile, High profile	
Frame Rate	Main Stream: 6 MP (3288 × 1860), max. 25 fps;6 MP (3200 × 1800), max. 25 fps; 4 MP (2560 × 1440), max. 30 fps; 3 MP (2304 × 1296), max. 30 fps; 1080P (1920 × 1080), max. 30 fps; 720P (1280 × 720), max. 30 fps; Sub Stream: 720P (1280 × 720), max. 30 fps; D1 (720 × 576), max. 30 fps; 640 × 360, max. 30 fps; 2CIF (704 × 288), max. 30 fps; CIF (352 × 288), max. 30 fps; Third Stream: D1 (720 × 576), max. 30 fps; 640 × 360, max. 30 fps; 2CIF (704 × 288), max. 30 fps; CIF (352 × 288), max. 30 fps;	
Video Bit Rate	128 Kbps to 16 Mbps	

U-code	Support
OSD	Up to 4 OSDs
Privacy Mask	Up to 4 areas
ROI	Support
Video Stream	Dual streams
Image	
White Balance	Auto, Outdoor, Fine tune, Sodium lamp, Locked, Auto2
Digital Noise Reduction	2D/3D DNR
Smart IR	Support
Flip	Normal, Flip vertical, Flip horizontal, 180°, 90° Clockwise, 90° Anti-clockwise
Dewarping	N/A
HLC	Support
BLC	Support
Defog	Digital defog
Events	
Basic Detection	Cross line (based on human body detection), Intrusion (based on human body detection), Motion detection, Ultra motion detection, Tampering alarm, Audio detection
General Function	Watermark, IP address filtering, Access policy, ARP protection, RTSP authentication, User authentication, HTTP authentication
Audio	
Audio Compression	G.711U, G.711A
Audio Bitrate	64 Kbps
Two-way Audio	Support
Suppression	Support
Sampling Rate	8 kHz
Storage	
Edge Storage	MicroSD, up to 512 GB
Network Storage	ANR, NAS (NFS)
Network	
Protocols	IPv4, IGMP, ICMP, ARP, TCP, UDP, DHCP, RTP, RTSP, RTCP, RTMP, DNS, DDNS, NTP, FTP, UPnP, HTTP, HTTPS, SMTP, SSL/TLS, SNMP, QoS
Compatible Integration	ONVIF (Profile S, Profile G, Profile T), API, SDK
User/Host	Up to 32 users. 3 user levels: administrator, common user and operator
Security	Password Protection, Strong Password, HTTPS Encryption, Export Operation Logs, Basic and Digest Authentication for RTSP, Digest Authentication for HTTP, TLS 1.2, WSSE and Digest Authentication for ONVIF
Client	EZStation, APP
Web Browser	Plug-in required live view: IE 10+, Chrome 45+, Firefox 52+, Edge 79+, Plug-in free live view: Chrome 57+, Firefox 58+, Edge 16+
Interface	
Audio I/O	N/A
Alarm I/O	N/A
Serial Port	N/A

Built-in Mic	Support
Built-in Speaker	Support
WIFI	N/A
Network	1 × RJ45 10 M/100 M Base-TX Ethernet
Video Output	N/A
Certification	
EMC	CE-EMC (EN 55032, EN 61000-3-3, EN IEC 61000-3-2, EN 50130) FCC (FCC 47 CFR part15 B)
Safety	CE LVD (EN 62368-1) UL/CUL (UL 62368-1, CAN/CSA C22.2 No. 62368-1)
Environment	CE-RoHS (2011/65/EU;(EU)2015/863); WEEE (2012/19/EU);
Protection	IP67 (IEC 60529)
General	
Power	DC 12 V±25%, PoE (IEEE 802.3af)
Power Consumption	Max. 9.0 W
Power Interface	Ø5.5 mm coaxial power plug
Dimensions	192 mm × 75 mm × 74 mm (7.6" × 2.9" × 2.9") (L × W × H)
Weight	0.40 kg (0.88 lb.)
Material	Graphene + Metal
Working Environment	-30 ℃ to 60 ℃ (-22 ℉ to 140 ℉), Humidity: ≤ 95% RH (non-condensing)
Storage Environment	-30 ℃ to 60 ℃ (-22 ℉ to 140 ℉), Humidity: ≤ 95% RH (non-condensing)
Surge Protection	4 KV
Reset Button	Support
Web Client Language	4 Languages: English, Russian, Spanish, Vietnamese

Dimensions

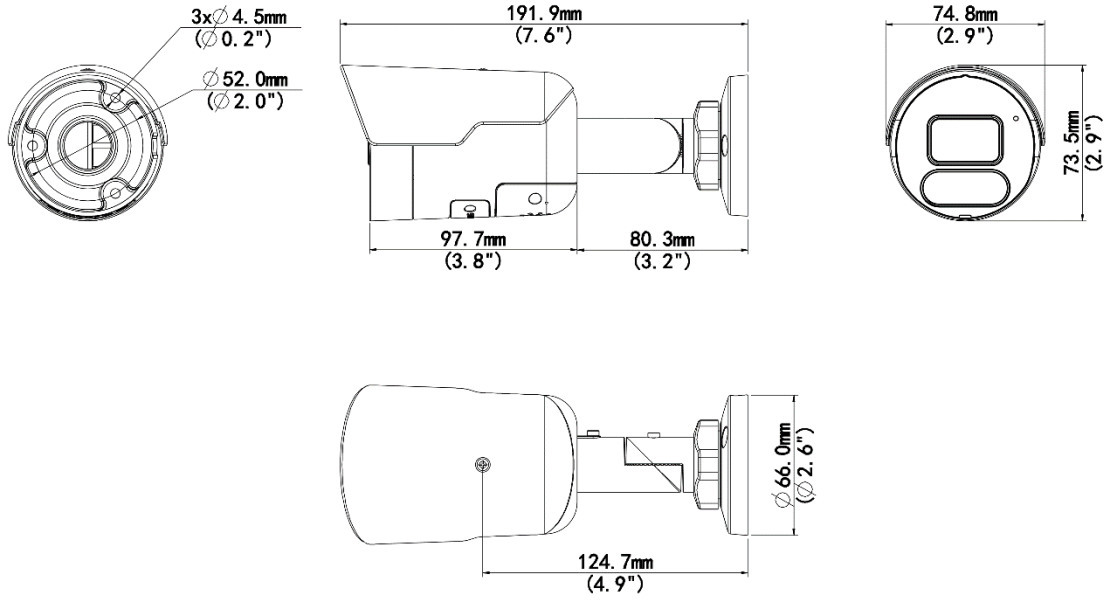

Accessories

TR-JB05-B-IN

Small Bullet Junction Box(Elegant White)



TR-A01-IN

NPT 3/4'' Waterproof Cable Gland



TR-UP06-C-IN-V2

Pole Mounting Bracket for Bullet Junction Box Only



TR-UC08-C-V2

Bullet&Dome Corner Mounting Bracket

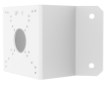

Zhejiang Uniview Technologies Co., Ltd.

http://www.uniview.com

overseasbusiness@uniview.com; globalsupport@uniview.com

No. 369, Xietong Road, Xixing Sub-district, Binjiang District, Hangzhou City, 310051, Zhejiang Province, China (Zhejiang) Pilot Free Trade Zone, China

©2023-2025 Zhejiang Uniview Technologies Co., Ltd. All rights reserved.

*Product specifications and availability are subject to change without notice.

*Despite our best efforts, technical or typographical errors may exist in this document.
Uniview cannot be held responsible for any such errors and reserves the right to change the contents of this document without prior notice.