DATASHEET

6MP HD Intelligent Light and Audible Warning Fixed Eyeball Network Camera

IPC3636SS-ADF28KMC-I1



Key Features



- High quality image with 6MP, 1/2.7"CMOS sensor
- 6MP (3072*2048)@ 30/25(default)fps; 5MP (2880*1620)@ 30/25fps; 4MP (2560*1440)@ 30/25fps; 3MP (2304*1296) @30/25fps; 2MP (1920*1080) @30/25fps
- Ultra 265, H.265, H.264, MJPEG
- Intelligent perimeter protection, include cross line, intrusion, enter area, leave area detection
- Based on target classification, smart intrusion prevention significantly reduce false alarm caused by leaves, birds and lights etc., accurately focus on human and, motor vehicle and non-motor vehicle
- Intelligent People Flow Counting and Crowd Density Monitoring
- Auto Scene Match (ASM)（Only WDR）
- 130dB true WDR technology enables clear image in strong light scene
- Support red & blue warning light
- Support 9:16 Corridor Mode
- Alarm:1 in/1 out, Audio: 1 in/1 out, Built-in Mic and Speaker
- Smart IR, up to 30m (98.4 ft) IR distance
- Supports 256 G Micro SD card

- IP67 protection

Specifications

	IPC3636SS-ADF28KMC-I1				
Camera					
Sensor	1/2.7", 6.0 megapixel, progressive scan, CMOS				
Minimum Illumination	Colour: 0.001 Lux (F1.0, AGC ON) 0 lux with IR on				
Day/Night	IR-cut filter with auto switch (ICR)				
Shutter	Auto/Manual, 1 ~ 1/100000s				
Adjustment angle	Pan: 0° ~ 360°	Tilt: 0° ~ 80°	Rotate: 0° ~ 360°		
WDR	130dB				
S/N	>56dB				
Lens					
Lens	2.8mm@F1.0				
Iris	Fixed				
Field of View (H)	107.2°				
Field of View (V)	56.39°				
Field of View (D)	110.11°				
DORI					
DORI Distance	Lens (mm)	Detect (m)	Observe (m)	Recognize (m)	Identify (m)
	2.8	63.0	25.2	12.6	6.3
Illuminator					
IR Range	Up to 30m (98.4 ft)				
Warm Light Range	Up to 30m (98.4 ft)				
Wavelength	850nm				
IR On/Off Control	Auto/Manual				
Video					
Video Compression	Ultra 265, H.265, H.264, MJPEG				
H.264 code profile	Baseline profile, Main profile, High profile				
Frame Rate	Main Stream: 6MP (3072*2048)), Max 30fps; 5MP (2880*1620), Max 30fps; 4MP (2560*1440), Max 30fps; 3MP (2304*1296), Max 30fps; 1080P (1920*1080), Max 30fps; 720P (1280*720), Max 30fps; Sub Stream: 1080P (1920*1080), Max 30fps; 720P (1280*720), Max 30fps; D1 (720*576), Max 30fps; 640*360, Max 30fps; 2CIF(704*288), Max 30fps; CIF(352*288), Max 30fps; Third Stream: D1 (720*576), Max 30fps; 640*360,Max 30fps; 2CIF(704*288), Max 30fps; CIF(352*288), Max 30fps;				
Video Bit Rate	128 Kbps~16 Mbps				
U-code	Support				
OSD	Up to 8 OSDs				
Privacy Mask	Up to 4 areas				
ROI	Up to 8 areas				
Video Stream	Triple streams				
Image					
Auto Scene Match (ASM)	Support（Only WDR）				
White Balance	Auto/Outdoor/Fine Tune/Sodium Lamp/Locked/Auto2				

Digital Noise Reduction	2D/3D DNR
Smart IR	Support
Flip	Normal/Vertical/Horizontal/180°/90°Clockwise/90°Anti-clockwise
Dewarping	N/A
HLC	Support
BLC	Support
Defog	Digital Defog
Intelligent	
Smart intrusion prevention	Support false alarm filtering: Cross Line detection, Intrusion detection, Enter Area detection, Leave Area detection
Statistical Analysis	People counting, support people flow counting and crowd density monitoring
Attribute Collection	SIP with color retrieval
Events	
Basic Detection	Motion detection, Ultra motion detection, Tampering alarm, Audio detection
General Function	Watermark, IP address filtering, tampering alarm, alarm input, alarm output, access Policy, ARP protection, RTSP authentication, user authentication
Audio	
Audio Compression	G.711U, G.711A
Audio Bitrate	64 Kbps
Two-way Audio	Support
Suppression	Support
Sampling Rate	8KHZ
Storage	
Edge Storage	Micro SD, up to 256GB
Network Storage	ANR, NAS(NFS)
Network	
Protocols	IPv4, IPv6, IGMP, ICMP, ARP, TCP, UDP, DHCP, PPPoE, RTP, RTSP, RTCP, DNS, DDNS, NTP, FTP, UPnP, HTTP, HTTPS, SMTP, 802.1x, SNMP, QoS, RTMP,SSL/TLS, SSH
Compatible Integration	ONVIF (Profile S, Profile G, Profile T), API,SDK
User/Host	Up to 32 users. 3 user levels: administrator, common user and operator
Security	Password protection, Strong password, HTTPS encryption, Export operation logs, Basic and digest authentication for RTSP, Digest authentication for HTTP, TLS 1.2, WSSE and digest authentication for ONVIF
Client	EZStation EZView EZLive
Web Browser	Plug-in required live view: IE 10 and above, Chrome 45 and above, Firefox 52 and above, Edge 79 and above
	Plug-in free live view: Chrome 57.0 and above, Firefox 58.0 and above, Edge 16 and above
Interface	
Audio I/O	Input: impedance 35kΩ; amplitude 2V [p-p]
	Output: impedance 600Ω; amplitude 2V [p-p]
Alarm I/O	1/1
RS485	N/A
Built-in Mic	Support
Built-in Speaker	Support
WIFI	N/A
Network	1 * RJ45 10M/100M Base-TX Ethernet
Video Output	N/A

Certifications	
EMC	CE-EMC (EN 55032,EN 61000-3-3,EN IEC 61000-3-2,EN 50130) FCC (FCC 47 CFR part15 B)
Safety	CE-LVD (EN 62368-1) CB (IEC 62368-1) UL/CUL (UL 62368-1, CAN/CSA C22.2 No. 62368-1)
Environment	CE-RoHS (2011/65/EU;(EU)2015/863); WEEE (2012/19/EU)
Protection	IP67 (IEC 60529)
General	
Power	DC 12V±25%, PoE (IEEE 802.3af)
	Power consumption: Max 10.0W
Power Interface	Ø 5.5mm coaxial power plug
Dimensions (Ø x H)	Φ129 x 118mm (Ø5.1" x 4.7")
Weight	0.69kg (1.53lb)
Material	Metal
Operating Conditions	-30°C ~ 60°C (-22°F ~ 140°F), Humidity: ≤95% RH (non-condensing)
Strorage Environment	-30°C ~ 60°C (-22°F ~ 140°F), Humidity: ≤95% RH (non-condensing)
Surge Protection	4KV
Reset Button	Support
Web Client Language	20 Languages Traditional Chinese, English, Simplified Chinese, Polish, German, Russian, French, Korean, Dutch, Czech, Portuguese (Europe), Portuguese (Brazil), Japanese, Thai, Turkish, Spanish (Latin America), Spanish (Europe), Hungarian, Italian, Vietnamese

Dimensions

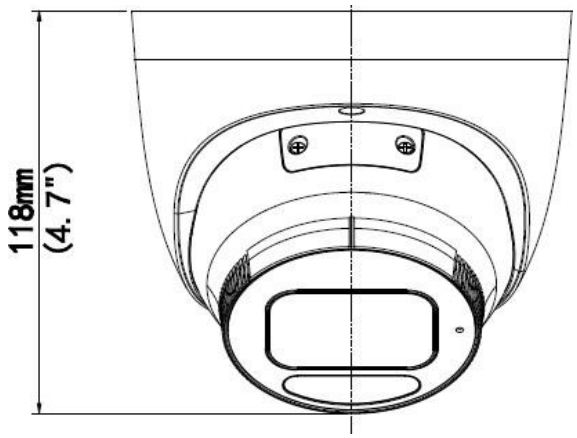

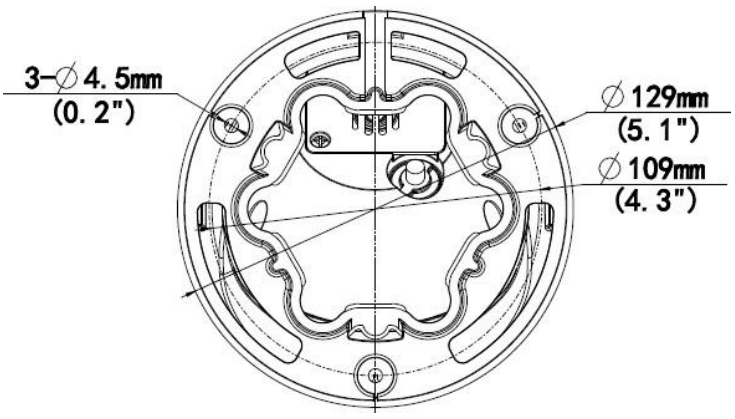

Accessories

TR-JB03-H-IN

Junction Box



TR-JB07/WM03-F-IN

Wall Mount

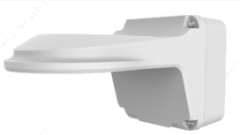

TR-WM03-B-IN

Wall Mount



TR-UP06-IN

Pole Mount



TR-A01-IN

Waterproof Joint



TR-SE24-IN

Pendant Mount



TR-SE24-A-IN

Pendant Mount

TR-CM24-IN

Pendant Mount



Junction Mount	Pole Mount
TR-JB03-H-IN	TR-JB07/WM03-F-IN(TR-WM03-B-IN)+TR-UP06-IN
	
TR-CM24-IN+TR-JB03-H-IN	

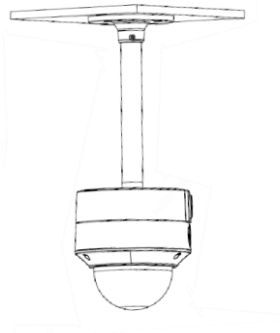	

Zhejiang Uniview Technologies Co., Ltd.

Building No. 369, Xietong Road, Xixing Sub-district, Binjiang District, Hangzhou City, Zhejiang Province, China，310051

Email: overseasbusiness@uniview.com; globalsupport@uniview.com

http://www.uniview.com

©2023 Zhejiang Uniview Technologies Co., Ltd. All rights reserved.

*Product specifications and availability are subject to change without notice.