DATASHEET

6MP ColorHunter with Wise-ISP Fixed Dome Network Camera

IPC3516LE-ADF28K-WP



Key Features

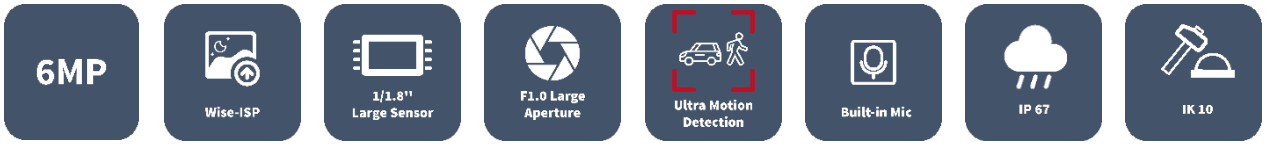

- High quality image with 6MP, 1/1.8"CMOS sensor and F1.0 large aperture lens
- 6MP (3200*1800)@25/20fps; 5MP (2880*1620)@25/20fps; 4MP (2560*1440)@ 25/20fps; 3MP (2304*1296) @30/25fps; 2MP (1920*1080) @30/25fps;
- Ultra 265, H.265, H.264, MJPEG
- Colorhunter with Wise-ISP technology ensures 24-hour full-color images
- 120dB true WDR technology enables clear image in strong light scene
- Built-in Mic
- Supports 512 GB Micro SD card
- IP67 protection
- IK10 protection
- Support PoE power supply
- 3-Axis

Specifications

	IPC3516LE-ADF28K-WP				
Camera					
Sensor	1/1.8", 6.0 megapixel, progressive scan, CMOS				
Minimum Illumination	Colour: 0.0003lux (F1.0, AGC ON)				
Shutter	Auto/Manual, 1 ~ 1/100000s				
Adjustment angle	Pan: 8° ~ 360°	Tilt: 0° ~ 68°	Rotate: 10° ~ 360°		
WDR	120dB				
S/N	>52dB				
Lens					
Lens	2.8mm@F1.0				
Iris	Fixed				
Field of View (H)	110.4°				
Field of View (V)	60.5°				
Field of View (D)	115.2°				
DORI					
DORI Distance	Lens (mm)	Detect（m）	Observe（m）	Recognize（m）	Identify（m）
	2.8	43.4(142.5ft)	17.4(57.0ft)	8.7(28.5ft)	4.3(14.3ft)
Video					
Video Compression	Ultra265, H.265, H.264, MJPEG				
H.264 code profile	Baseline profile, Main profile, High profile				
Frame Rate	Main Stream: 6MP (3200*1800),Max 25fps; 5MP (2880*1620), Max 25fps; 4MP (2560*1440), Max 25fps; 3MP (2304*1296), Max 30fps; 1080P (1920*1080), Max 30fps; Sub Stream: 720P (1280*720), Max 30fps; D1 (720*576), Max 30fps; 640*360,Max 30fps; 2CIF(704*288), Max 30fps; CIF(352*288), Max 30fps;				
Video Bit Rate	128 Kbps~6144Kbps				
U-code	Support				
OSD	Up to 4 OSDs				
Privacy Mask	Up to 4 areas				
ROI	Up to 8 areas				
Video Stream	Dual streams				
Image					
White Balance	Auto/Outdoor/Fine Tune/Sodium Lamp/Locked/Auto2				
Digital noise reduction	2D/3D DNR				
Smart Illumination	N/A				
Flip	Normal/Vertical/Horizontal/180°				
Dewarping	N/A				
HLC	Support				
BLC	Support				
Defog	Digital Defog				
Events					
Basic Detection	Cross line, intrusion(based on human body detection), Motion detection, Ultra motion detection, Tampering alarm, Audio Detection				
General Function	Watermark, IP Address Filtering, Access Policy, ARP Protection, RTSP Authentication, User Authentication, HTTP				

	authentication
Audio	
Audio Compression	G.711U, G.711A
Audio Bitrate	64 Kbps
Two-way audio	N/A
Suppression	Support
Sampling Rate	8KHZ
Storage	
Edge Storage	Micro SD, up to 512GB
Network Storage	ANR, NAS(NFS)
Network	
Protocols	IPv4, IGMP, ICMP, ARP, TCP, UDP, DHCP, PPPoE, RTP, RTSP, RTCP, DNS, DDNS, NTP, FTP, UPnP, HTTP, HTTPS, SMTP, SNMP, 802.1x, QoS, RTMP,SSL/TLS
Compatible Integration	ONVIF (Profile S, Profile G, Profile T), API,SDK
User/Host	Up to 32 users. 2 user levels: administrator and common user
Security	Password protection, Strong password, HTTPS encryption, Export operation logs, Basic and digest authentication for RTSP, Digest authentication for HTTP, TLS 1.2, WSSE and digest authentication for ONVIF
Client	EZStation EZView EZLive
Web Browser	Plug-in required live view: IE 10 and above, Chrome 45 and above, Firefox 52 and above, Edge 79 and above
	Plug-in free live view: Chrome 57.0 and above, Firefox 58.0 and above, Edge 16 and above
Interface	
Audio I/O	N/A
Alarm I/O	N/A
Serial Port	N/A
Built-in Mic	Support
Built-in Speaker	N/A
WIFI	N/A
Network	1 * RJ45 10M/100M Base-TX Ethernet
Video Output	N/A
Certifications	
EMC	CE-EMC (EN 55032,EN 61000-3-3,EN IEC 61000-3-2,EN 55035) FCC (FCC 47 CFR part15 B)
Safety	CE LVD (EN 62368-1) UL/CUL (UL 62368-1, CAN/CSA C22.2 No. 62368-1)
Environment	CE-RoHS (2011/65/EU;(EU)2015/863); WEEE (2012/19/EU)
Protection	IP67 (IEC 60529) IK10 (IEC 62262)
General	
Power	DC 12V±25%, PoE (IEEE 802.3af)
	Power consumption: Max 2.8W
Power Interface	Ø 5.5mm coaxial power plug
Dimensions (Ø x H)	Φ128mmx100mm (Ø5.0” x 3.9”)
Weight	0.63kg (1.39lb)
Material	Metal + Plastic

Working Environment	-30°C ~ 60°C (-22°F ~ 140°F), Humidity: ≤95% RH (non-condensing)
Strorage Environment	-30°C ~ 60°C (-22°F ~ 140°F), Humidity: ≤95% RH (non-condensing)
surge protection	4KV
Reset Button	Support

Dimensions

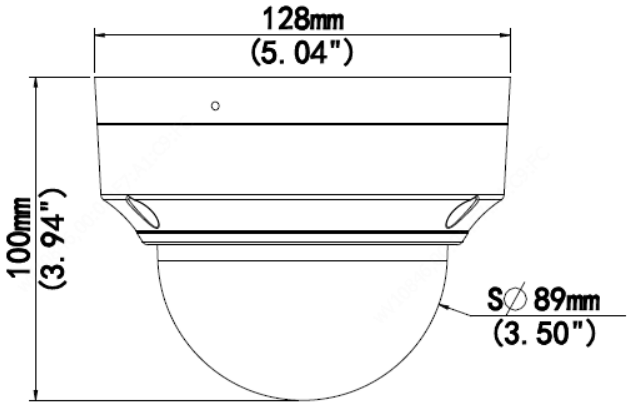

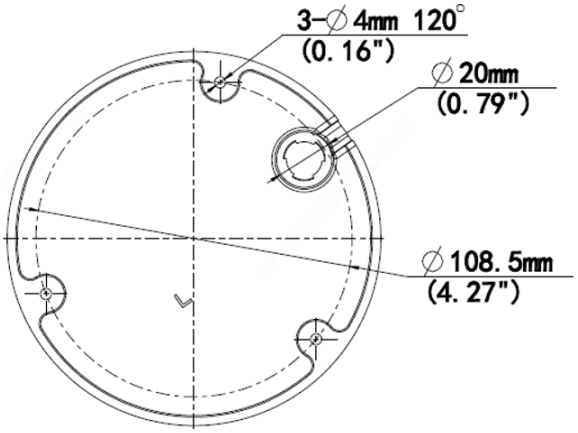

Accessories

TR-JB03-H-IN

Junction Box



TR-JB07/WM03-F-IN

Wall Mount

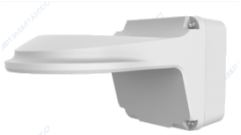

TR-WM03-B-IN

Wall Mount

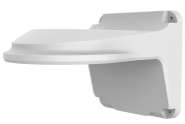

TR-UP06-IN

Pole Mount



TR-A01-IN

Waterproof Joint

TR-SE24-IN

Pendant Mount

TR-SE24-A-IN

Pendant Mount

TR-CM24-IN

Pendant Mount






Junction Mount	Pole Mount
TR-JB03-H-IN	TR-JB07/WM03-F-IN(TR-WM03-B-IN)+TR-UP06-IN
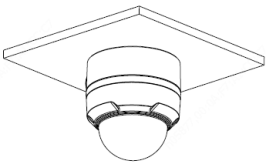	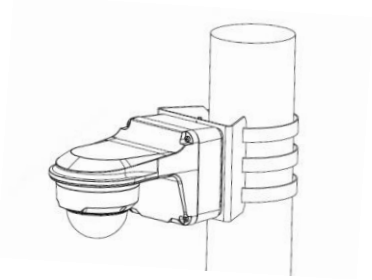
TR-CM24-IN+TR-JB03-H-IN	
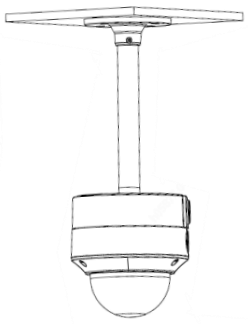	

Zhejiang Uniview Technologies Co., Ltd.

Building No.10, Wanlun Science Park, Jiangling Road 88, Binjiang District, Hangzhou, Zhejiang, China (310051)

Email: overseasbusiness@uniview.com; globalsupport@uniview.com

http://www.uniview.com

©2024 Zhejiang Uniview Technologies Co., Ltd. All rights reserved.

*Product specifications and availability are subject to change without notice.