DATASHEET

4MP LightHunter WDR Network Dome Camera

IPC3234EA





Features

- 5 years Warranty
- High quality image with 4MP,1/1.8" CMOS sensor
- 2688*1520@60fps in the main stream, offering smoother live video and more details
- Ultra 265, H.265, H.264, MJPEG
- ISP technology, comprehensive improvement in image quality
- Metadata analyse, support human body, motor vehicle and non motor vehicle image capture and attribute collection, realize data visualization management, allow users to get target information for further data analysis
- , support front end comparison, support blocklist and allowlist comparison, increases the concurrent detection number up to 120
- Smart intrusion prevention, support false alarm filtering, include Cross Line, Intrusion, Enter Area, Leave Area detection
- People Counting, support people flow counting and crowd density monitoring, suitable for different statistical scenarios
- LightHunter technology ensures ultra high image quality in low illumination environment
- Up to 140 dB Optical WDR (Wide Dynamic Range)
- DC12V or PoE (IEEE 802.3af) power supply
- Wide voltage range of ±25% in DC

Specifications

Model	IPC3234EA-AHDZK-AE	IPC3234EA-AHDX4K-AE
Camera		

Sensor	1/1.8" CMOS	
Min. Illumination	Colour:0.0003 lux (F1.2, AGC ON) B/W:0.0001 lux (F1.2, AGC ON) 0 lux with IR	Colour:0.0005 lux (F1.6, AGC ON) B/W:0.0003 lux (F1.6, AGC ON) 0 lux with IR
Day/Night	IR-cut filter with auto switch (ICR)	
Shutter	Auto/Manual, 1 to 1/100000 s	
WDR	140 dB	
S/N	>56 dB	
Lens		
Focal Length	2.8 to 12 mm	8 to 32 mm
Optical Zoom	4X	
Iris	F1.2	F1.6
Field of View (H)	106.6°~ 51.3°	42.6°~ 15.2°
Field of View (V)	56.9°~ 28.6°	23.5°~ 8.9°
Field of View (D)	131.1°~ 63.1°	52.4°~ 17.9°
Iris Type	P-iris	
DORI		
DORI Distance (Detect)	68.0m(223.0ft)~166.2m(545.2ft)	124.1m(407.3ft)~496.6m(1629.1ft)
DORI Distance (Observe)	27.2m(89.2ft)~66.5m(218.1ft)	49.7m(162.9ft)~198.6m(651.6ft)
DORI Distance (Recognize)	13.6m(44.6ft)~33.2m(109.0ft)	24.8m(81.5ft)~99.3m(325.8ft)
DORI Distance (Identify)	6.8m(22.3ft)~16.6m(54.5ft)	12.4m(40.7ft)~49.7m(162.9ft)
Illuminator		
Illumination Distance (IR)	40 m (131.2 ft)	
Wavelength	850 nm	
IR On/Off Control	Auto/Manual	
Video		
Frame Rate-Main Stream	4MP(2688*1520), Max 60fps	
Video Compression	Ultra 265, H.265, H.264, MJPEG	
Frame Rate-Sub Stream	2MP(1920*1080), Max 60fps;	
Video Bit Rate	128 Kbps to 16 Mbps	
ROI	Support	
Privacy Mask	Up to 8 areas (8 blacks / 8 mosaics)	
Video Stream	Triple Streams	
OSD	Up to 10 OSDs	

Frame Rate-Third Stream	D1 (720*576), Max 60fps	
Image		
White Balance	Auto&Outdoor&Fine Tune&Sodium Lamp&Locked&Auto2	
Digital Noise Reduction	2D/3D DNR	
Smart IR	Support	
Flip	Normal&Flip Vertical&Flip Horizontal&180°&90°Clockwise&90°Anti-clockwise	
HLC	Support	
Defog	Digital Defog	
Intelligent		
Metadata Analyse	Support human body, human face, motor vehicle and non-motor vehicle image capture and attribute collection	
Recognition	Face recognition: Max support 16 face libraries; Max supports 100000 faces in face library	
People Counting	Support People Flow Counting and Crowd Density Monitoring	
Exception Detection	Object Removed|Object Left Behind|Scene Change|Defocus Detection	Object Removed|Object Left Behind
Smart Intrusion Prevention	Cross line detection, intrusion detection, enter area detection, leave area detection (support false alarm filtering and the classification of human, non-motor vehicle and vehicle)	
Events		
Basic Detection	Motion Detection|Tampering Alarm|Audio Detection|Object Removed|Object Left Behind|Scene Change|Defocus Detection	Motion Detection|Tampering Alarm|Audio Detection|Object Removed|Object Left Behind
General Function	Watermark&IP Address Filtering&Access Policy&ARP Protection&RTSP Authentication&User Authentication&HTTP authentication&Alarm input&Alarm output	
Audio		
Audio Compression	G.711U&G.711A	
Audio Bitrate	128 Kbps	
Two-way Audio	Support	
Suppression	Support	
Sampling Rate	16KHZ	
Storage		
Edge Storage	Micro SD, up to 512 GB	
Network Storage	ANR&NAS(NFS)	
Network		
Protocols	IGMP, RTP, SMTP, IPv4, IPv6, ICMP, ARP, TCP, UDP, DHCP, PPPoE, RTSP, RTCP, RTMP, DNS, DDNS, NTP, FTP, UPnP, HTTP, HTTPS, 802.1x, SNMP, QoS, SSL/TLS, SSH, TLS1.3	
Compatible Integration	ONVIF (Profile S, Profile G, Profile T), API, SDK	
User/Host	Up to 32 users. 3 user levels: administrator, common user and operator	
Security	Password protection&Strong password&HTTPS encryption&Export operation logs&Basic and digest authentication for RTSP&Digest authentication for HTTP&TLS 1.2&WSSE and digest authentication for ONVIF	
Client	EZStation, UNV-Link, UNV-Link Pro	

Web Browser	Plug-in required live view: IE 10 and above, Chrome 45 and above, Firefox 52 and above, Edge 79 and above&Plug-in free live view: Chrome 57.0 and above, Firefox 58.0 and above, Edge 16 and above	
Interface		
Audio I/O	2 Input: impedance 1 kΩ, amplitude 2.5 V [p-p], 1 Output: impedance 600 Ω, amplitude 2.5 V [p-p]	
Alarm I/O	3/2	
Serial Port	1 channel RS485 interface	
Built-in Mic	Support, built-in mic*2	
Built-in Speaker	Support	
Network	1 × RJ45 10 M/100 M/1000 M Base-TX Ethernet	
Certification		
EMC	CE-EMC (EN 55032: 2015+A1:2020,EN 61000-3-3: 2013+A1: 2019,EN IEC 61000-3-2: 2019+A1: 2021,EN 55035: 2017+A11:2020) FCC (FCC CFR 47 part15 B, ANSI C63.4-2014)	
Safety	CE LVD (EN 62368-1:2014+A11:2017) UL (UL 62368-1, 2nd Ed., Issue Date: 2014-12-01)	
Environment	CE-RoHS (2011/65/EU;(EU)2015/863); WEEE (2012/19/EU); Reach (Regulation (EC) No 1907/2006)	
Protection	IP67 (IEC 60529:1989+AMD1:1999+AMD2:2013) IK10 (IEC 62262:2002)	
General		
Power	DC12V(±25%) , PoE+ (IEEE 802.3af)	
Power Consumption	17W	18W
Power Interface	Ø5.5 mm coaxial power plug	
Dimensions	Ø 148.0 x 111.4 mm (Ø 5.8" x 4.4") (Ø x H)	
Built-in DC12V Output	Support	
Weight	1.01kg(2.23lb)	1.06kg(2.34lb)
Working Environment	-30℃ ~ 60℃ (-22°F ~ 140°F), Humidity: ≤95% RH (non-condensing)	
Surge Protection	6 KV	
Reset Button	Support	
Heater	Support	

Dimensions

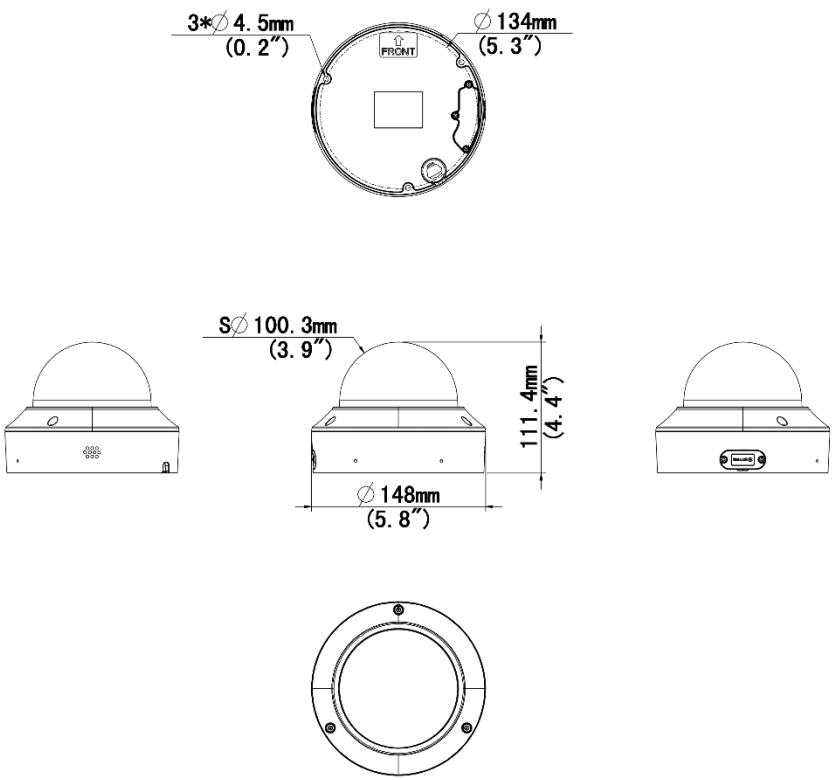

Accessories

TR-JB04-C-IN

Junction Box for 323 Series Fix-dome(Support wiring from behind)



TR-JB07/WM04-B-IN

4 Inch Back Hole Hemisphere Wall Mounting Assembling Bracket



TR-WM04-IN

4 Inch Hemisphere Wall Mounting Bracket

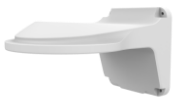

TR-FM152-A-IN

In-ceiling Bracket for 323 Series Fix-dome



TR-SM04-IN

Switch Box Adapter for 323 Series Fix-dome



TR-A01-IN

NPT 3/4" Waterproof Cable Gland



TR-UP06-IN

Universal Pole Mounting Bracket



TR-UC08-C

Bullet&Dome Corner Mounting Bracket

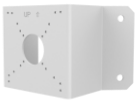

Zhejiang Uniview Technologies Co., Ltd.

No. 369, Xietong Road, Xixing Sub-district, Binjiang District, Hangzhou City, 310051, Zhejiang Province, China (Zhejiang) Pilot Free Trade Zone, China

Email: overseasbusiness@uniview.com; globalsupport@uniview.com

http://www.uniview.com

©2024-2025 Zhejiang Uniview Technologies Co., Ltd. All rights reserved.

*Product specifications and availability are subject to change without notice.

*Despite our best efforts, technical or typographical errors may exist in this document. Uniview cannot be held responsible for any such errors and reserves the right to change the contents of this document without prior notice.