DATASHEET

5MP Lighthunter WDR IR Network Bullet Camera

IPC2A25SE-ADZK-I0





Features

- High quality image with 5MP,1/1.8" CMOS sensor
- 5MP (2880*1620) @ 20fps ， 4MP (2688*1520) @30fps in the main stream
- Ultra 265, H.265, H.264, MJPEG
- Smart intrusion prevention, support false alarm filtering, include Cross Line, Intrusion, Enter Area, Leave Area detection
- Face capture, automatic selection of best snapshots and face attribute collection
- People Counting, support people flow counting and crowd density monitoring, suitable for different statistical scenarios
- Starlight technology ensures ultra-high image quality in low illumination environment
- Up to 120 dB Optical WDR (Wide Dynamic Range)
- Built-in heater, support normal start-up at low temperature
- DC12V or PoE (IEEE 802.3af) power supply
- Wide voltage range of ±25% in DC
- Audio 1 in and 1 out, Alarm 2 in and 1 out

Specifications

Model	IPC2A25SE-ADZK-I0-NB
Camera	
Sensor	1/1.8" CMOS

Min. Illumination	Colour:0.0005 lux (F1.2, AGC ON) 0 lux with IR
Day/Night	IR-cut filter with auto switch (ICR)
Shutter	Auto/Manual, 1 to 1/100000 s
WDR	120 dB
Adjustment Angle	Pan: 0° to 360°, tilt: 0° to 90°, rotate: 0° to 360°
S/N	>56 dB
Lens	
Focal Length	2.8 to 12 mm
Digital Zoom	16X
Optical Zoom	5X
Iris	F1.2
Field of View (H)	113.7°~42.6°
Field of View (V)	59.0°~24.1°
Field of View (D)	139.9°~52.4°
Iris Type	Fixed
DORI	
DORI Distance (Lens)	2.8~12(mm)
DORI Distance (Detect)	68.0m(223.0ft)~166.2m(545.2ft)
DORI Distance (Observe)	27.2m(89.2ft)~66.5m(218.1ft)
DORI Distance (Recognize)	13.6m(44.6ft)~33.2m(109.0ft)
DORI Distance (Identify)	6.8m(22.3ft)~16.6m(54.5ft)
Video	
Video Compression	Ultra 265, H.265, H.264, MJPEG
Frame Rate-Main Stream	5MP (2880*1620) @ 20fps ， 4MP (2688*1520), Max 30fps
Frame Rate-Sub Stream	1080P (1920*1080), Max 30fps
Video Bit Rate	128 Kbps to 16 Mbps
U-code	Support
ROI	Support
Video Stream	Triple Streams
OSD	Up to 10 OSDs
Privacy Mask	Up to 4 areas
Frame Rate-Third Stream	D1 (720*576), Max 30fps
Events	
Basic Detection	Motion Detection, Tampering Alarm, Audio Detection, Object Removed, Object Left Behind, Scene Change, Defocus Detection
General Function	Watermark, IP Address Filtering, Access Policy, ARP Protection, RTSP Authentication, User Authentication, HTTP Authentication, Alarm Input, Alarm Output
Intelligent	
Exception Detection	Object Removed, Object Left Behind, Scene Change, Defocus Detection
Face Capture	Support, Face attributes: gender, age range, glasses, mask

Smart Intrusion Prevention	Cross line detection, intrusion detection, enter area detection, leave area detection (support false alarm filtering and the classification of human, non-motor vehicle and vehicle)
People Counting	Support People Flow Counting and Crowd Density Monitoring
Traffic Monitoring	Support capturing car license picture when the car passes tripwire, Up to 4 lanes can be set, Two types of application mode avaliable: High/Low pole
Audio	
Audio Compression	G.711U, G.711A
Audio Bitrate	128 Kbps
Two-way Audio	Support
Suppression	Support
Sampling Rate	16KHZ
Storage	
Edge Storage	Micro SD, up to 512 GB
Network Storage	ANR, NAS (NFS)
Image	
White Balance	Auto, Outdoor, Fine Tune, Sodium Lamp, Locked, Auto2
Digital Noise Reduction	2D/3D DNR
Flip	Normal, Flip Vertical, Flip Horizontal, 180°, 90° Clockwise, 90° Anti-clockwise
HLC	Support
BLC	Support
Smart IR	Support
Defog	Digital Defog
Heatwave Reduction	N/A
Network	
Protocols	SSH, IGMP, RTP, RTCP, SMTP, IPv4, IPv6, ICMP, ARP, TCP, UDP, DHCP, PPPoE, RTSP, RTMP, DNS, DDNS, NTP, FTP, UPnP, HTTP, HTTPS, 802.1x, SNMP, QoS, SSL/TLS
Compatible Integration	ONVIF (Profile S, Profile G, Profile T, Profile M), API, SDK
User/Host	Up to 32 users. 3 user levels: administrator, common user and operator
Interface	
Audio I/O	1 Input: impedance 1 kΩ, amplitude 2.5 V [p-p], 1 Output: impedance 600 Ω, amplitude 2.5 V [p-p]
Alarm I/O	2/1
Built-in Mic	Support
Network	1 × RJ45 10 M/100 M Base-TX Ethernet
Video Output	1 BNC (For debugging)
Illuminator	
Illumination Distance (IR)	80 m (262 ft)
IR On/Off Control	Auto/Manual
Wavelength	850 nm
Certification	

EMC	CE-EMC (EN 55032: 2015+A1:2020,EN 61000-3-3: 2013+A1: 2019,EN IEC 61000-3-2: 2019+A1: 2021,EN 55035: 2017+A11:2020) FCC (FCC CFR 47 part15 B, ANSI C63.4-2014)
Safety	CE LVD (EN 62368-1:2014+A11:2017) UL (UL 62368-1, 2nd Ed., Issue Date: 2014-12-01)
Environment	CE-RoHS (2011/65/EU;(EU)2015/863); WEEE (2012/19/EU); Reach (Regulation (EC) No 1907/2006)
Protection	IP67 (IEC 60529:1989+AMD1:1999+AMD2:2013) IK10 (IEC 62262:2002)
General	
Power	DC12V(±25%), PoE(IEEE 802.3af)
Power Consumption	Max 10W
Power Interface	Ø5.5 mm coaxial power plug
Dimensions	Ø 130 x 322 mm (Ø 5.1" x 12.7") (Ø x H)
Weight	1.3Kg(2.87lb)
Working Environment	-40 ℃ to 60 ℃ (-40 °F to 140 °F), Humidity: ≤ 95% RH (non-condensing)
Storage Environment	-40 ℃ to 70 ℃ (-40 °F to 158 °F), Humidity: ≤ 95% RH (non-condensing)
Surge Protection	6 KV
Web Client Language	22 Languages: Traditional Chinese, English, Simplified Chinese, Polish, German, Russian, French, Korean, Dutch, Czech, Portuguese (Europe), Portuguese (Brazil), Japanese, Thai, Turkish, Spanish (Latin America), Spanish (Europe), Hungarian, Italian, Vietnamese, Arabic, Slovak
Heater	Support

Dimensions

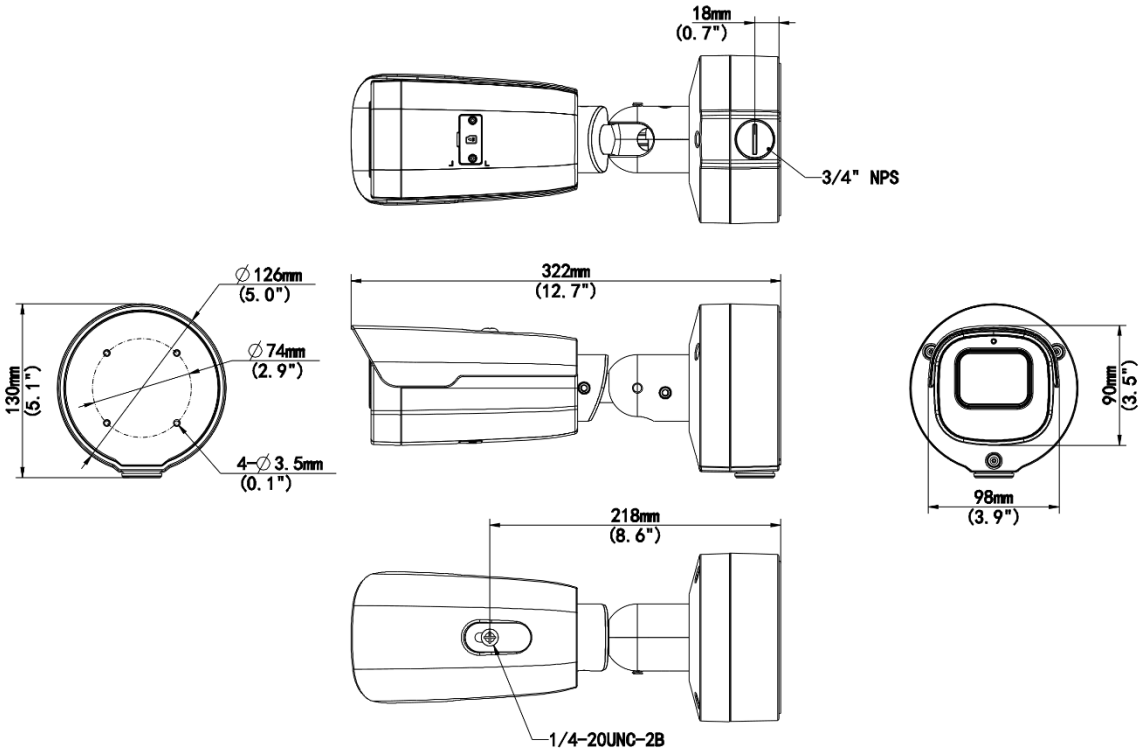
18mm
(0.7")
3/4" NPS
∅126mm
(5.0")
∅74mm
(2.9")
4-∅3.5mm
(0.1")
130mm
(5.1")
322mm
(12.7")
90mm
(3.5")
98mm
(3.9")
218mm
(8.6")
1/4-20UNC-2B