DATASHEET

6MP ColorHunter with Wise-ISP Fixed Warm Light Turret Network Camera

IPC3636SE-ADF28K-WP-I1





Features

- High quality image with 6MP, 1/1.8"CMOS sensor
- 6MP (3072*2048)@ 30(default)fps; 4MP (2688*1520)@ 30/25fps; 4MP (2560*1440)@ 30/25fps; 3MP (2304*1296) @30/25fps; 2MP (1920*1080) @30/25fps
- Ultra 265, H.265, H.264, MJPEG
- Colorhunter with Wise-ISP technology ensures 24-hour full-color images
- Intelligent perimeter protection, include cross line, intrusion, enter area, leave area detection
- Based on target classification, smart intrusion prevention significantly reduce false alarm caused by leaves, birds and lights etc., accurately focus on human and, motor vehicle and non-motor vehicle
- Intelligent People Flow Counting and Crowd Density Monitoring
- Smart intrusion prevention with Color retrieval
- Auto Scene Match (ASM)
- 130dB true WDR technology enables clear image in strong light scene
- Support 9:16 Corridor Mode

- Alarm:1 in/1 out, Audio: 1 in/1 out, Built-in Mic
- White Light, up to 30m warm light distance
- Supports 512 G Micro SD card
- IK10 vandal resistant and IP67 protection

Specifications

Model	IPC3636SE-ADF28K-WP-I1
Camera	
Max Resolution	6 MP
Sensor	1/1.8" CMOS
Min. Illumination	Colour: 0.0003 lux (F1.0, AGC ON)
Shutter	Auto/Manual,1 to 1/100000 s
Adjustment Angle	Pan: 0° ~ 360°, Tilt: 0° ~ 75°, Rotate: 0° ~ 360°
S/N	>56 dB
WDR	130 dB
Lens	
Focal Length	2.8 mm
Iris Type	Fixed
Iris	F1.0
Field of View (H)	110.4°
Field of View (V)	60.5°
Field of View (D)	115.2°
Lens Type	Fixed
DORI	
DORI Distance (Detect)	43.4m(142.5ft)
DORI Distance (Observe)	17.4m(57.0ft)

DORI Distance (Recognize)	8.7m(28.5ft)
DORI Distance (Identify)	4.3m(14.3ft)
Illuminator	
Supplemental Light	Warm light
Illumination Distance (Warm Light)	30 m (98.4 ft)
Light On/Off Control	Auto/Manual
Video	
Video Compression	Ultra 265, H.265, H.264, MJPEG
H.264 Code Profile	Baseline profile, Main profile, High profile
Frame Rate	Main Stream: 6MP (3072*2048)), Max 30fps; 4MP (2688*1520), Max 30fps; 4MP (2560*1440), Max 30fps; 3MP (2304*1296), Max 30fps; 1080P (1920*1080), Max 30fps; 720P (1280*720), Max 30fps; Sub Stream: 1080P (1920*1080), Max 30fps; 720P (1280*720), Max 30fps; D1 (720*576), Max 30fps; 640*360, Max 30fps; 2CIF(704*288), Max 30fps; CIF(352*288), Max 30fps; Third Stream: D1 (720*576), Max 30fps; 640*360,Max 30fps; 2CIF(704*288), Max 30fps; CIF(352*288), Max 30fps;
Video Bit Rate	128 Kbps to 16 Mbps
U-code	Support
OSD	Up to 8 OSDs
Privacy Mask	Up to 4 areas
ROI	Support
Video Stream	Triple Streams
Image	
Auto Scene Match (ASM)	Support
White Balance	Auto, Outdoor, Fine Tune, Sodium Lamp, Locked, Auto2

Digital Noise Reduction	2D/3D DNR
Smart IR	Support
Flip	Normal, Flip Vertical, Flip Horizontal, 180°, 90° Clockwise, 90° Anti-clockwise
Dewarping	N/A
HLC	Support
BLC	Support
Defog	Digital Defog
Intelligent	
Smart Intrusion Prevention	Cross line detection, intrusion detection, enter area detection, leave area detection (support false alarm filtering and the classification of human, non-motor vehicle and vehicle)
Statistical Analysis	N/A
People Counting	Support People Flow Counting and Crowd Density Monitoring
Attribute Collection	SIP with color retrieval
Events	
Basic Detection	Motion Detection, Ultra Motion Detection, Tampering Alarm, Audio Detection, Object Removed, Object Left Behind
General Function	Watermark, IP Address Filtering, Access Policy, ARP Protection, RTSP Authentication, User Authentication, HTTP Authentication, Alarm Input, Alarm Output
Audio	
Audio Compression	G.711U, G.711A
Audio Bitrate	64 Kbps
Two-way Audio	Support
Suppression	Support
Sampling Rate	8 kHz
Storage	
Edge Storage	Micro SD, up to 512 GB
Network Storage	ANR, NAS (NFS)

Network	
Protocols	IPv4, IPv6, IGMP, ICMP, ARP, TCP, UDP, DHCP, PPPoE, RTP, RTSP, RTCP, RTMP, DNS, DDNS, NTP, FTP, UPnP, HTTP, HTTPS, SMTP, 802.1x, SNMP, QoS, SSL/TLS, SSH
Compatible Integration	ONVIF (Profile S, Profile G, Profile T, Profile M), API, SDK
User/Host	Up to 32 users. 3 user levels: administrator, common user and operator
Security	Password Protection, Strong Password, HTTPS Encryption, Export Operation Logs, Basic and Digest Authentication for RTSP, Digest Authentication for HTTP, TLS 1.2, WSSE and Digest Authentication for ONVIF
Client	UNV-Link, UNV-Link Pro, EZStation
Web Browser	Plug-in required live view: IE 10+, Chrome 45+, Firefox 52+, Edge 79+, Plug-in free live view: Chrome 57+, Firefox 58+, Edge 16+
Interface	
Audio I/O	1 Input: impedance 35 kΩ, amplitude 2 V [p-p], 1 Output: impedance 600 Ω, amplitude 2 V [p-p]
Alarm I/O	1/1
Serial Port	N/A
Built-in Mic	Support
Built-in Speaker	N/A
WIFI	N/A
Network	1 × RJ45 10 M/100 M Base-TX Ethernet
Video Output	N/A
Certification	
EMC	CE-EMC (EN 55032, EN 61000-3-3, EN IEC 61000-3-2, EN 50130) FCC (FCC 47 CFR part15 B)
Safety	CE-LVD (EN 62368-1) CB (IEC 62368-1) UL/CUL (UL 62368-1, CAN/CSA C22.2 No. 62368-1)
Environment	CE-RoHS (2011/65/EU;(EU)2015/863); WEEE (2012/19/EU)
Protection	IP67 (IEC 60529) IK10 (IEC 62262)
General	
Power	DC 12V±25%, PoE (IEEE 802.3af)

Power Consumption	Max 4.5W
Power Interface	Ø5.5 mm coaxial power plug
Dimensions	Ø129 x 110mm (Ø5.1" x 4.3") (Ø x H)
Weight	0.67kg (1.47lb)
Material	Metal
Working Environment	-30 ℃ to 60 ℃ (-22 ℉ to 140 ℉), Humidity: ≤ 95% RH (non-condensing)
Storage Environment	-30 ℃ to 60 ℃ (-22 ℉ to 140 ℉), Humidity: ≤ 95% RH (non-condensing)
Surge Protection	4 KV
Reset Button	Support
Web Client Language	20 Languages Traditional Chinese, English, Simplified Chinese, Polish, German, Russian, French, Korean, Dutch, Czech, Portuguese (Europe), Portuguese (Brazil), Japanese, Thai, Turkish, Spanish (Latin America), Spanish (Europe), Hungarian, Italian, Vietnamese

Dimensions

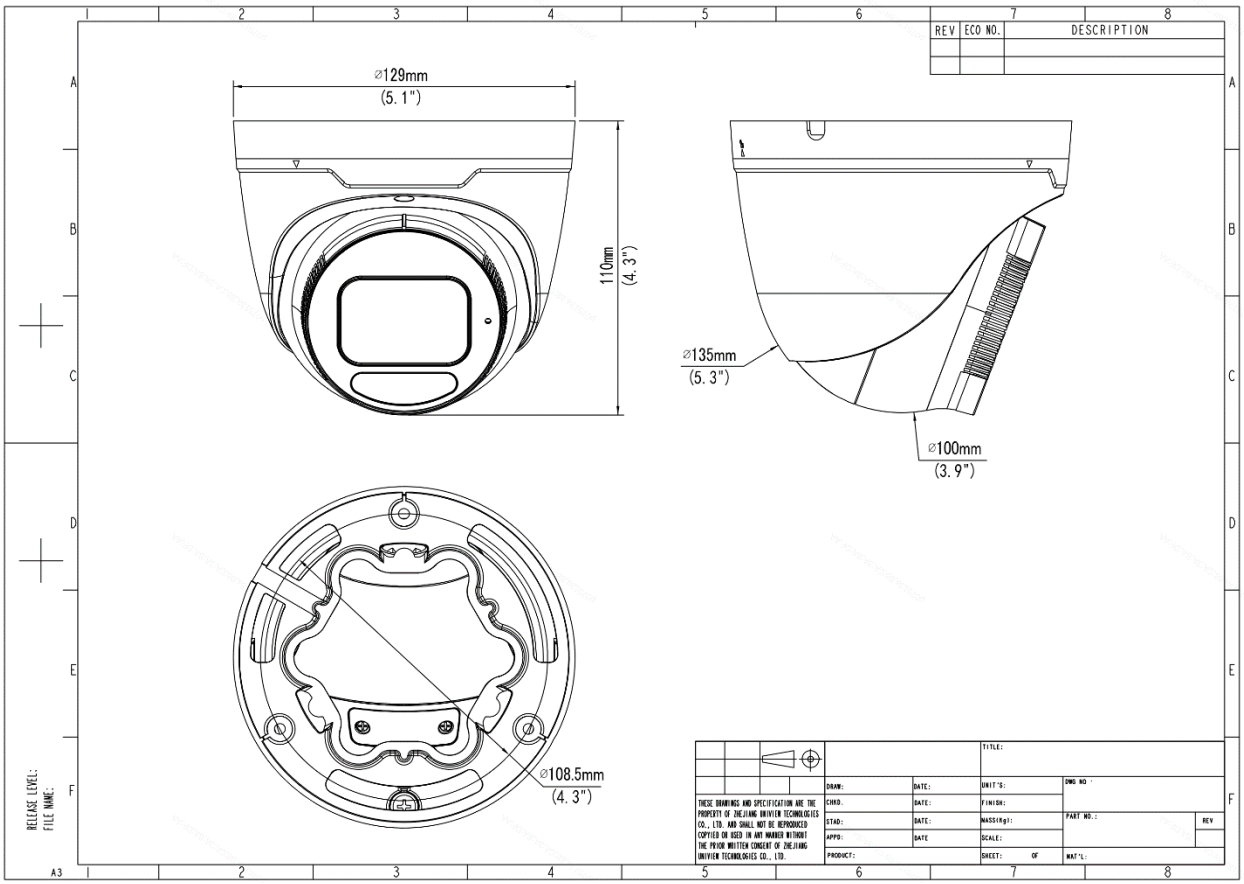

Zhejiang Uniview Technologies Co., Ltd.

No. 369, Xietong Road, Xixing Sub-district, Binjiang District, Hangzhou City, 310051, Zhejiang Province, China

Email: overseasbusiness@uniview.com; globalsupport@uniview.com

http://www.uniview.com

©2024 Zhejiang Uniview Technologies Co., Ltd. All rights reserved.

*Product specifications and availability are subject to change without notice.

*Despite our best efforts, technical or typographical errors may exist in this document. Uniview cannot be held responsible for any such errors and reserves the right to change the contents of this document without prior notice.